YAMAHA

PARTS CATALOGUE

YXR66FAV (5UG9) U.S.A.
YXR66FAV (5UGA) CANADA

1E5UG-100E1

(2E5UG-100E1)

YAMAHA GENUINE Parts & Accessories

2009/2/16

NEWS NO.	DATE	COMMENT
PE0-MC-050199	Nov.,21,2005	FIG.26 FRONT DIFFERENTIAL ILLUSTRATION CORRECTION
PE0-MC-060011	FeB.,15,2006	FIG.46 HEADLIGHT ILLUSTRATION CORRECTION
PE0-MC-070013	Jan.,15,2007	FIG.41 GUARD ILLUSTRATION CORRECTION
PE0-MC-080018	Apr.,22,2008	DOORS,PASSENGER HANDHOLDS,LABEL LIST/ILLUST. REVISION
PE0-MC-080041	July, 4,2008	FIG.46 HEADLIGHT LIST/ILLUST. REVISION
PE0-MC-090006	Jan.,30,2009	MOD:FIG.48 ELECTRICAL 1 LIST REVISION

YXR66FAV
PARTS CATALOGUE
©2005 by Yamaha Motor Co., Ltd.
1st edition, September 2005
All rights reserved.
Any reprinting or unauthorized use
without the written permission of
Yamaha Motor Co., Ltd.
is expressly prohibited.

A3

A4

FOREWORD

This Parts Catalogue is related to the parts for the model(s) on the cover page. When you are ordering replacement parts, please refer to this Parts Catalogue and quote both part numbers and part names correctly.

1. Modifications or additions which have been made after the issue of the Parts Catalogue will be announced in the Parts News.
   It is advisable that you make the necessary corrections to the Parts Catalogue according to the Parts News.

2. Abbreviations
   The following abbreviations are used in this Parts Catalogue.

   “UR” Use specified parts number.
   “UN” Use as many as needed.
   “AP” Alternate Parts
   “LM” Locally Made (Parts need to be ordered locally)
   “F#” Frame No. (Applicable machine No.)
   “O/S” Over Size

3. The number of components for assembly
   - Parts, which are to be supplied in an assembly, are listed with a dot (.) in front of the part name as shown below.
   - The numeral appearing to the right of each component part indicates the quantity of parts for each assembly unit.

PART NO.	DESCRIPTION	Q’TY	REMARKS
2F5–83310–60	FRONT FLASHER LIGHT ASSY	2	
115–83311–60	.BULB (6V–18W)	1	

4. Applicable colours of graphics are represented in the “REMARKS” as shown below.

PART NO.	DESCRIPTION	Q’TY	REMARKS
2N4–24110–00–X5	FUEL TANK COMP.	2	MXR
3J1–24240–10	.GRAPHIC, FUEL TANK	1	FOR MXR

5. Note that the illustrations for reference in finding parts numbers are not to be used for assembling. When assembling, please use the applicable service manual.

6. The asterisk (*) before a reference number indicates modified items after the first edition.

7. Applicable Serial No.

Engine Serial No.

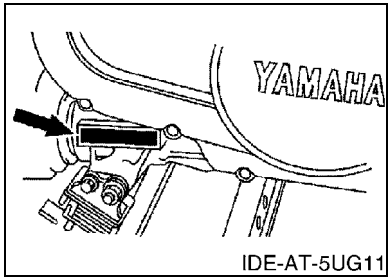

Frame Serial No.

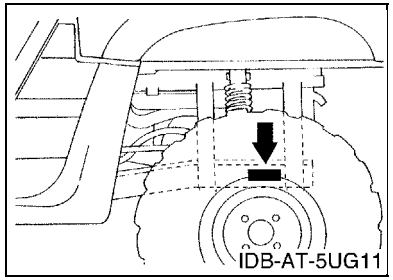

8. Applicable Colour Code (The (*) mark shows Model colour.)

Abbreviation	Colour Name	Colour Code
PDG(*)	PASTEL DEEP GREEN	00K0

9. Quantity Column Information

Column No.	Name Of Q'ty Column	Destination
1	USA	U.S.A.
2	CAN	CANADA

MODEL LABEL

(1) A label called “Model Label” is affixed in the location as indicated in (3) below. When using this parts catalogue, please be sure to cross–reference the “model code – production code No.” in the catalogue with the “model code – production code No.” indicated on the Model Label affixed onto the product concerned.

(2) “Model Label” Indication

a b ○ xxxx – xxx ● x c	a: Model Type Code b: Production Code No. c: Colouring Type

○ 4TW1–010 ● A

(3) Model Label Affixing Location

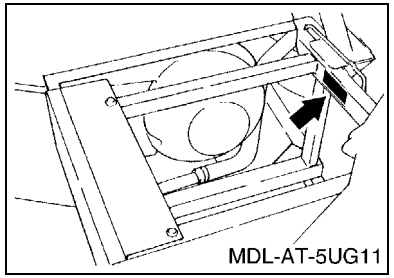

(4) Colouring Information

Model Code	Colouring Type Code	Colour Code	Colour Name	Abbreviation
5UG9	B	00K0	PASTEL DEEP GREEN	PDG
5UGA	B	00K0	PASTEL DEEP GREEN	PDG

(5) Model Code – Production Code Number of Model Listed in This Parts Catalogue

Model Code	Production Code No.	Country (destination)
5UG9	010	U.S.A.
	990	U.S.A.
5UGA	010	CANADA

CONTENTS

ENGINE

CYLINDER HEAD B2
CYLINDER B4
CRANKSHAFT & PISTON B5
VALVE B7
CAMSHAFT & CHAIN B8
WATER PUMP B9
RADIATOR & HOSE B10
OIL PUMP B12
OIL PIPE B14
INTAKE B15
CARBURETOR C3
EXHAUST C5
CRANKCASE C6
CRANKCASE COVER 1 ..... C8
STARTER CLUTCH C11
CLUTCH C12
TRANSMISSION C14
MIDDLE DRIVE GEAR C15
SHIFT CAM & FORK D3
SHIFT SHAFT D4

CHASSIS

FRAME D6
FRONT FENDER D8
SIDE COVER D10
REAR ARM D12
DRIVE SHAFT D13
FRONT DIFFERENTIAL E2
REAR SUSPENSION E5
FRONT SUSPENSION & WHEEL E6
STEERING E7
FUEL TANK E8
SEAT E10
FRONT WHEEL E12
FRONT WHEEL 2 ..... E14
FRONT BRAKE CALIPER F2
REAR WHEEL F3
REAR WHEEL 2 ..... F5
REAR BRAKE CALIPER F7
STAND & FOOTREST F8
REAR MASTER CYLINDER F10
CARRIER F12
GUARD F14
GUARD 2 ..... F15
GENERATOR G2
STARTING MOTOR G3
METER G4
HEADLIGHT G5
TAILLIGHT G6
ELECTRICAL 1 ..... G7
ELECTRICAL 2 ..... G10
EMBLEM & LABEL 1 ..... G12
EMBLEM & LABEL 2 ..... G13

ALTERNATE PARTS

ALTERNATE FOR METER G14

INDEX

NUMERICAL INDEX M1

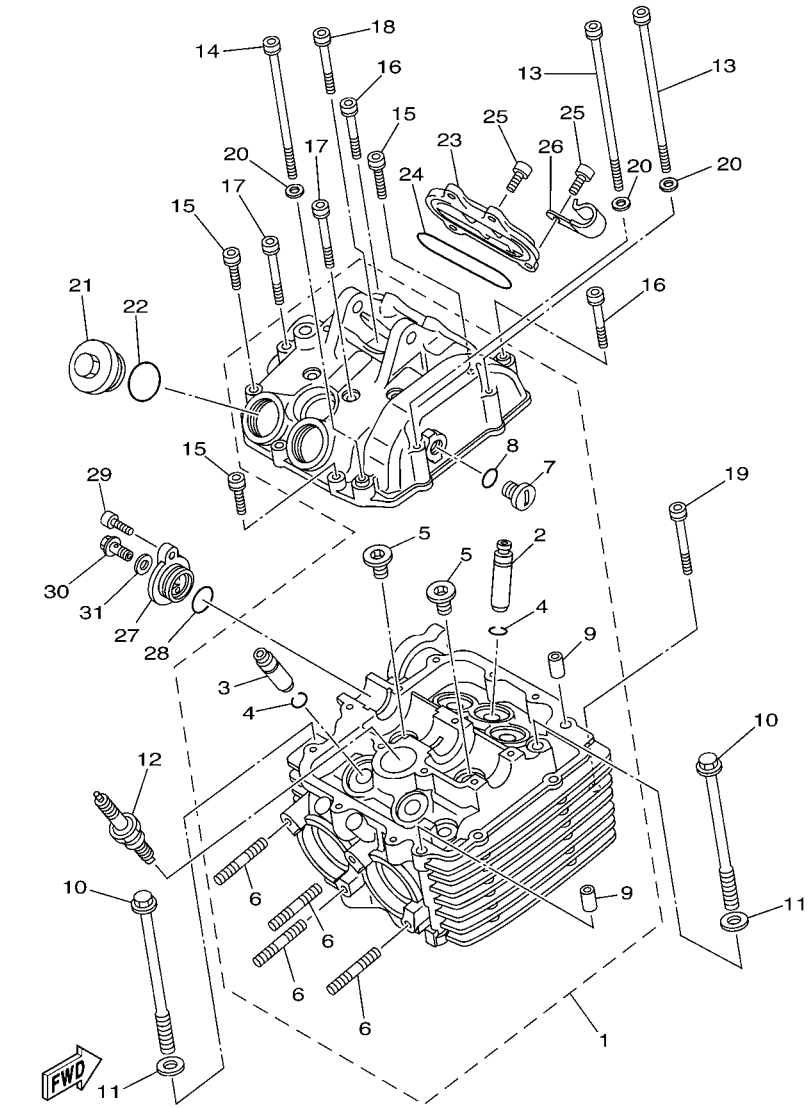

FIG. 1 CYLINDER HEAD

REF. NO.	PART NO.	DESCRIPTION	USA	CAN				REMARKS
1	5KM–11101–01	CYLINDER HEAD ASSY	1	1				
2	5KM–11133–10	.GUIDE, VALVE 1	3	3				
3	5KM–11134–10	.GUIDE, VALVE 2	2	2				
4	93440–10085	.CIRCLIP	5	5				
5	90340–18101	.PLUG, STRAIGHT SCREW	2	2				
6	95617–08625	.BOLT, STUD	4	4				
7	90340–14117	.PLUG, STRAIGHT SCREW	1	1				
8	93210–13657	.O-RING	1	1				
9	99530–10116	.PIN, DOWEL	2	2				
10	90105–09648	BOLT, FLANGE	4	4				
11	90201–096J9	WASHER, PLATE	4	4				
12	94701–00241	PLUG, SPARK (NGK DPR8EA-9)	1	1				
13	91317–06130	BOLT	2	2				
14	91317–06115	BOLT	1	1				
15	91317–06025	BOLT	5	5				
16	91317–06040	BOLT	2	2				
17	91317–06055	BOLT	6	6				
18	90109–063E9	BOLT	1	1				
19	91317–06050	BOLT	1	1				
20	92907–06600	WASHER, PLATE	3	3				
21	1L9–11186–00	COVER, CYLINDER HEAD SIDE 2	2	2				
22	93210–32172	O-RING	2	2				
23	3YF–11187–00	COVER, CYLINDER HEAD SIDE 3	1	1				
24	93210–71360	O-RING	1	1				
25	91317–06018	BOLT	4	4				
26	90462–20003	CLAMP	1	1				
27	3TB–12215–01	CAP, TENSIONER CASE	1	1				

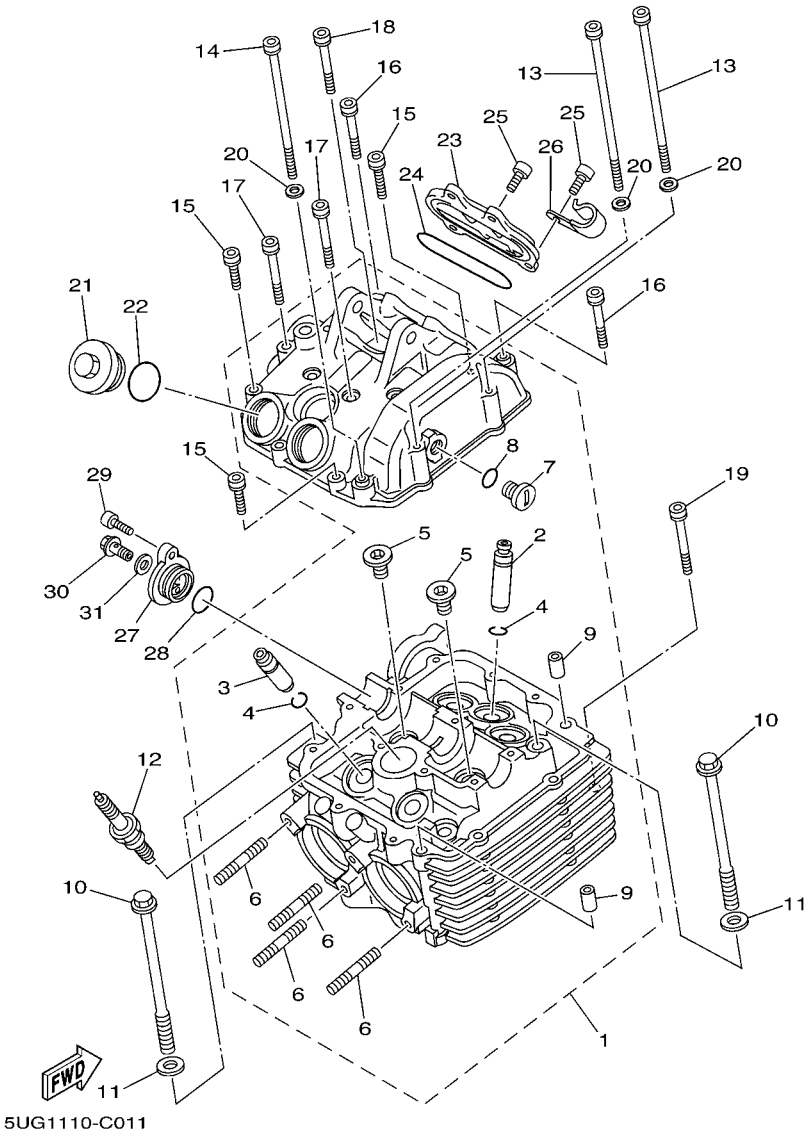

FIG. 1 CYLINDER HEAD

REF. NO.	PART NO.	DESCRIPTION	USA	CAN				REMARKS
28	93210–19522	O-RING	1	1				
29	90110–06093	BOLT, HEXAGON SOCKET HEAD	1	1				
30	90401–06001	BOLT, UNION	1	1				
31	90430–06192	GASKET	1	1				

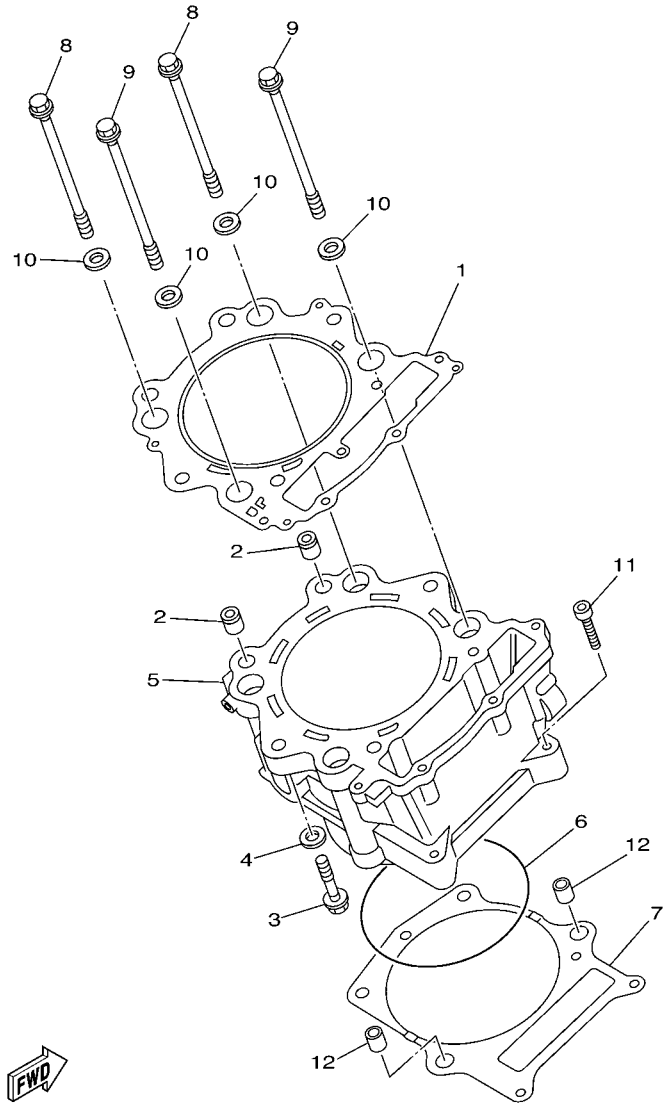

5UG1110-C020

FIG. 2 CYLINDER

REF. NO.	PART NO.	DESCRIPTION	USA	CAN				REMARKS
1	3YF–11181–00	GASKET, CYLINDER HEAD 1	1	1				
2	93612–16254	PIN, DOWEL	2	2				
3	90105–09647	BOLT, FLANGE	2	2				
4	90201–096J9	WASHER, PLATE	2	2				
5	5KM–11310–00	CYLINDER	1	1				
6	93211–01467	O-RING	1	1				
7	5KM–11351–00	GASKET, CYLINDER	1	1				
8	90105–10649	BOLT, FLANGE	2	2				
9	90105–10650	BOLT, FLANGE	2	2				
10	90201–101A4	WASHER, PLATE	4	4				
11	91317–06040	BOLT	2	2				
12	99530–14016	PIN, DOWEL	2	2				

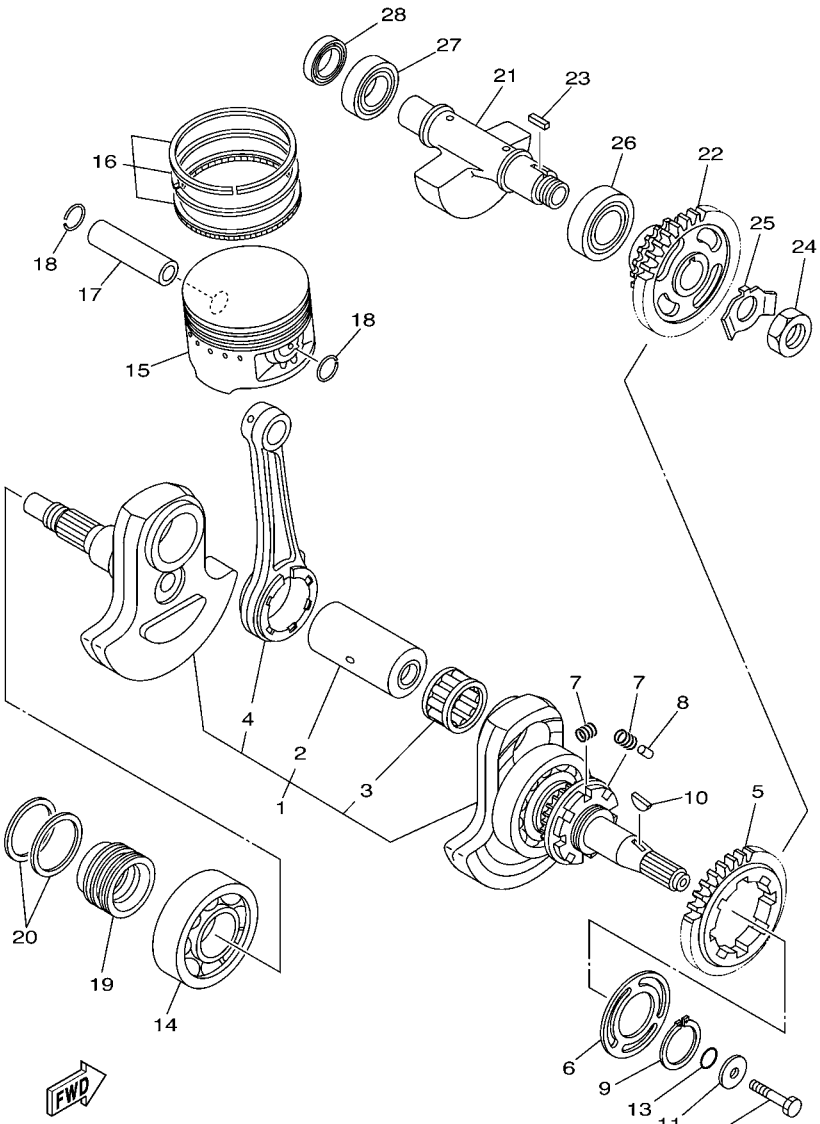

5UG1110-C030

FIG. 3 CRANKSHAFT & PISTON

REF. NO.	PART NO.	DESCRIPTION	USA	CAN				REMARKS
1	5KM–11400–00	CRANKSHAFT ASSY	1	1				
2	5KM–11681–00	.PIN, CRANK 1	1	1				
3	93310–637D3	.BEARING	1	1				
4	5LP–11651–00	.ROD, CONNECTING	1	1				
5	5KM–11536–00	GEAR, DRIVE	1	1				
6	5KM–11565–00	WASHER, BEARING COVER	1	1				
7	90501–220A1	SPRING, COMPRESSION	8	8				
8	93606–09002	PIN, DOWEL	4	4				
9	99009–35400	CIRCLIP	1	1				
10	90280–16053	KEY, WOODRUFF	1	1				
11	90201–10321	WASHER, PLATE	1	1				
12	90101–10568	BOLT	1	1				
13	93210–16290	O-RING	1	1				
14	93306–30702	BEARING	1	1				
15	3YF–11631–00–X0	PISTON (STD)	1	1				
	3YF–11636–00	PISTON (0.50MM O/S)	1	1				AP
	3YF–11638–00	PISTON (1.00MM O/S)	1	1				AP
16	2C6–11603–00	PISTON RING SET (STD)	1	1				
	2C6–11605–00	PISTON RING SET (0.50MM O/S)	1	1				AP
	2C6–11607–00	PISTON RING SET (1.00MM O/S)	1	1				AP
17	3YF–11633–01	PIN, PISTON	1	1				
18	93450–24028	CIRCLIP	2	2				
19	5KM–16181–00	SPACER 1	1	1				
20	5KM–11447–00	SEAL, CRANK	2	2				
21	5KM–11454–10	WEIGHT 1	1	1				
22	5KM–11530–00	BALANCER WEIGHT GEAR COMP.	1	1				
23	90282–05005	KEY, STRAIGHT	1	1				

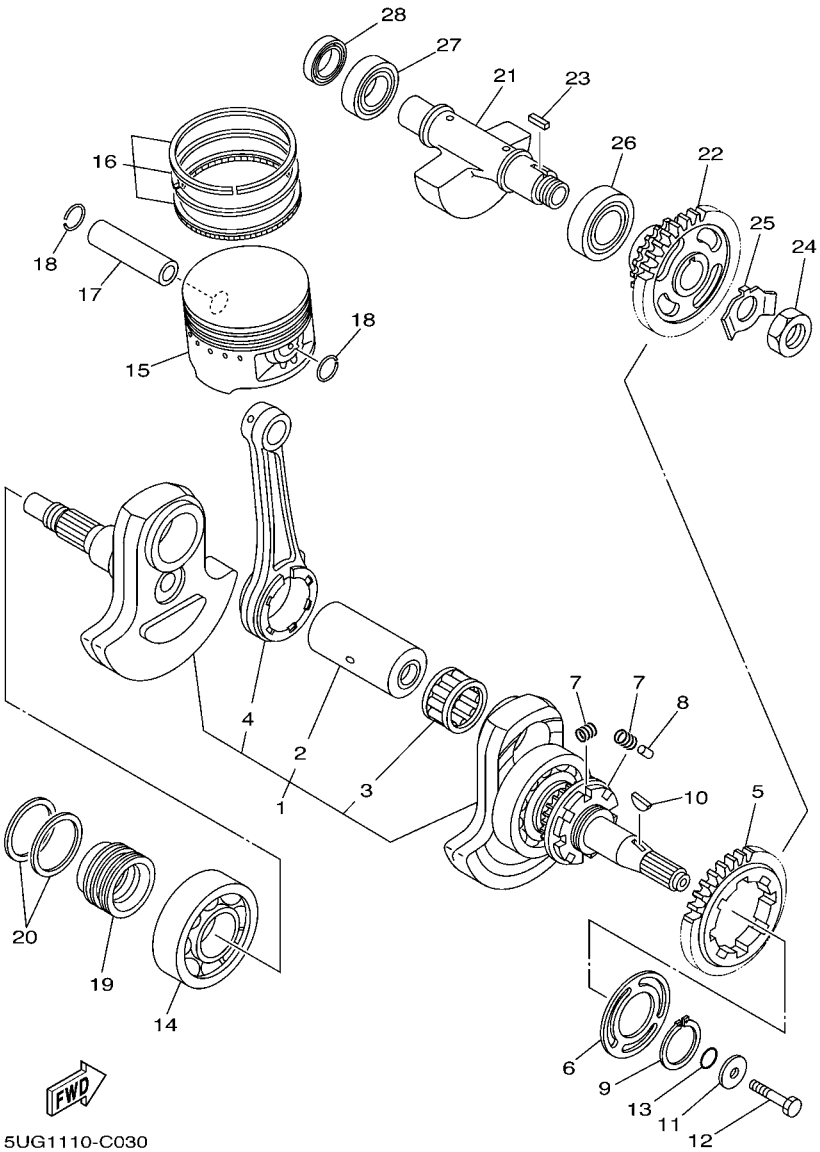

FIG. 3 CRANKSHAFT & PISTON

REF. NO.	PART NO.	DESCRIPTION	USA	CAN				REMARKS
24	90170–18003	NUT	1	1				
25	90215–18001	WASHER, LOCK	1	1				
26	93306–30534	BEARING	1	1				
27	93306–30432	BEARING	1	1				
28	93102–20108	OIL SEAL	1	1				

FIG. 4 VALVE

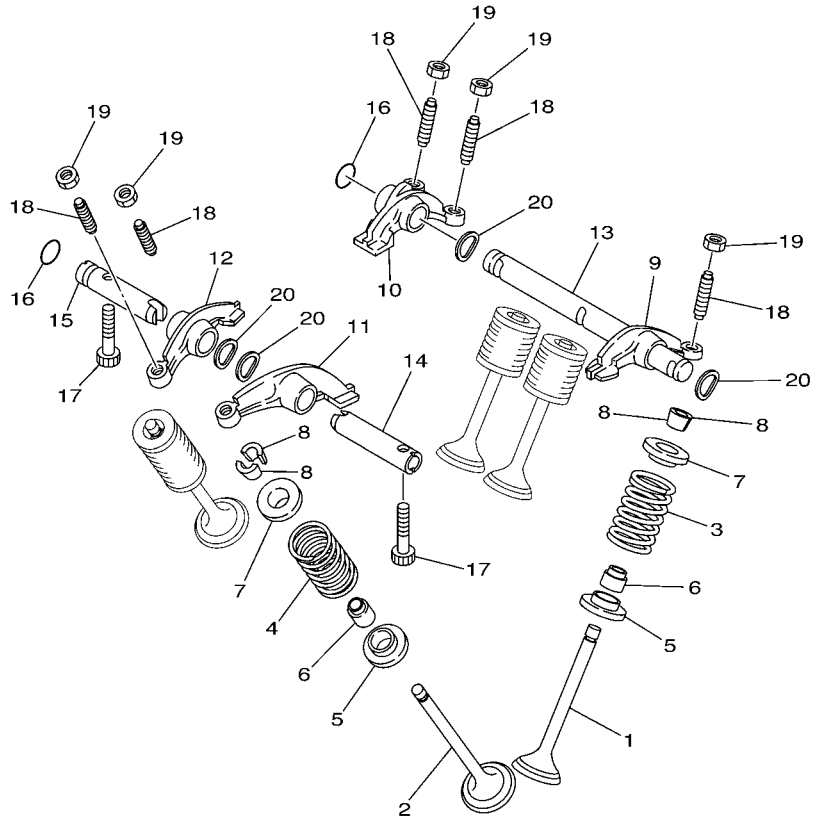

5UG1110-C040

REF. NO.	PART NO.	DESCRIPTION	USA	CAN				REMARKS
1	5KM–12111–00	VALVE, INTAKE	3	3				
2	3YF–12121–00	VALVE, EXHAUST	2	2				
3	3YF–12113–00	SPRING, VALVE INNER	3	3				
4	3YF–12114–00	SPRING, VALVE OUTER	2	2				
5	3YF–12116–00	SEAT, VALVE SPRING	5	5				
6	5H0–12119–00	SEAL, VALVE STEM	5	5				
7	3YF–12117–01	RETAINER, VALVE SPRING	5	5				
8	4G0–12118–00	COTTER, VALVE	10	10				
9	3YF–12151–00	ARM, VALVE ROCKER	1	1				
10	3YF–12161–00	ARM, VALVE ROCKER 2	1	1				
11	3YF–12162–00	ARM, VALVE ROCKER 3	1	1				
12	3YF–12163–00	ARM, VALVE ROCKER 4	1	1				
13	3YF–12146–00	SHAFT, ROCKER	1	1				
14	2NX–12156–00	SHAFT, ROCKER 2	1	1				
15	3YF–12166–00	SHAFT, ROCKER 3	1	1				
16	93210–08521	O-RING	2	2				
17	90109–063E8	BOLT	2	2				
18	2NX–12159–00	SCREW, VALVE ADJUSTING	5	5				
19	90170–06128	NUT	5	5				
20	90206–12075	WASHER, WAVE	4	4				

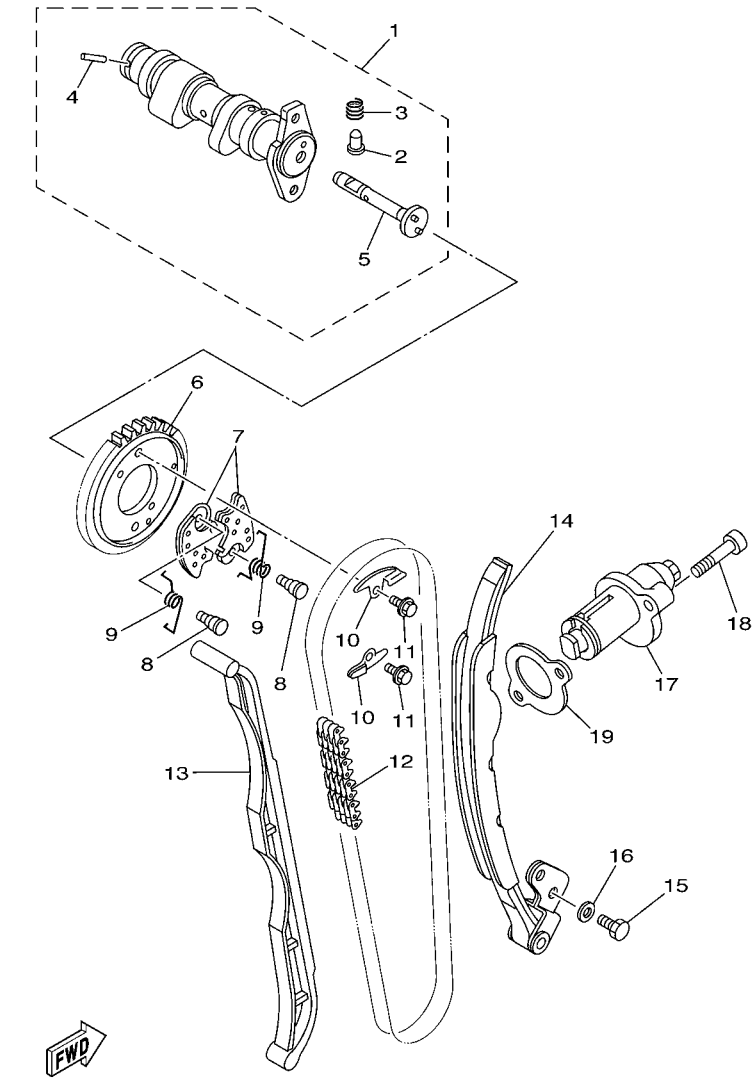

5UG1110-C050

FIG. 5 CAMSHAFT & CHAIN

REF. NO.	PART NO.	DESCRIPTION	USA	CAN				REMARKS
1	5KM–12170–00	CAMSHAFT ASSY 1	1	1				
2	3YF–12284–00	.PIN, DECOMPRESSION LEVER	1	1				
3	90501–05001	.SPRING, COMPRESSION	1	1				
4	93603–21180	.PIN, DOWEL	1	1				
5	3YF–12290–00	.LEVER, DECOMPRESSION SPRING	1	1				
6	5KM–12176–00	SPROCKET, CAM CHAIN	1	1				
7	3YF–12288–00	CAM, DECOMPRESSION	2	2				
8	3YF–12247–00	SHAFT, TENSIONER	2	2				
9	5KM–12216–00	SPRING	2	2				
10	3YF–12233–01	PLATE, GUIDE STOPPER 1	2	2				
11	90105–07004	BOLT, FLANGE	2	2				
12	94591–46126	CHAIN (92RH2010J-126M)	1	1				
13	5KM–12231–10	GUIDE, STOPPER 1	1	1				
14	5KM–12241–00	GUIDE, STOPPER 2	1	1				
15	97027–06016	BOLT	2	2				
16	92907–06600	WASHER, PLATE	2	2				
17	5KM–12210–00	TENSIONER ASSY, CAM CHAIN	1	1				
18	90110–06039	BOLT, HEXAGON SOCKET HEAD	2	2				
19	4DW–12213–00	GASKET, TENSIONER CASE	1	1				

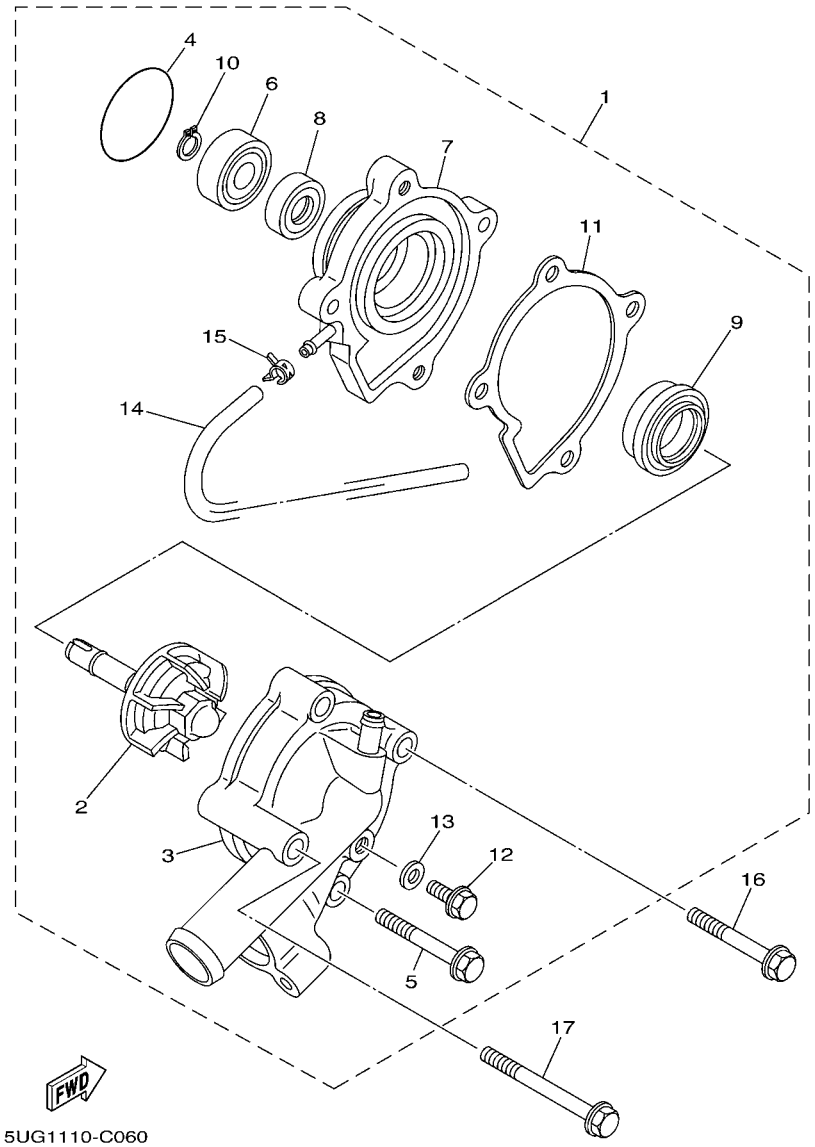

FIG. 6 WATER PUMP

REF. NO.	PART NO.	DESCRIPTION	USA	CAN				REMARKS
1	5KM–12420–10	WATER PUMP ASSY	1	1				
2	5KM–12450–10	.IMPELLER SHAFT ASSY	1	1				
3	5KM–12422–00	.COVER, HOUSING	1	1				
4	93210–33133	.O-RING	1	1				
5	90105–06023	.BOLT, FLANGE	2	2				
6	93306–00006	.BEARING	1	1				
7	5KM–12421–00	.HOUSING, WATER PUMP	1	1				
8	93101–10090	.OIL SEAL	1	1				
9	11H–12438–10	.SEAL, MECHANICAL	1	1				
10	99009–10400	.CIRCLIP	1	1				
11	5KM–12428–00	.GASKET, HOUSING COVER 2	1	1				
12	95027–06012	.BOLT, FLANGE	1	1				
13	90430–06014	.GASKET	1	1				
14	90446–06001	.HOSE (L300)	1	1				
15	90467–06194	.CLIP	1	1				
16	95027–06045	BOLT, FLANGE	1	1				
17	95027–06065	BOLT, FLANGE	1	1				

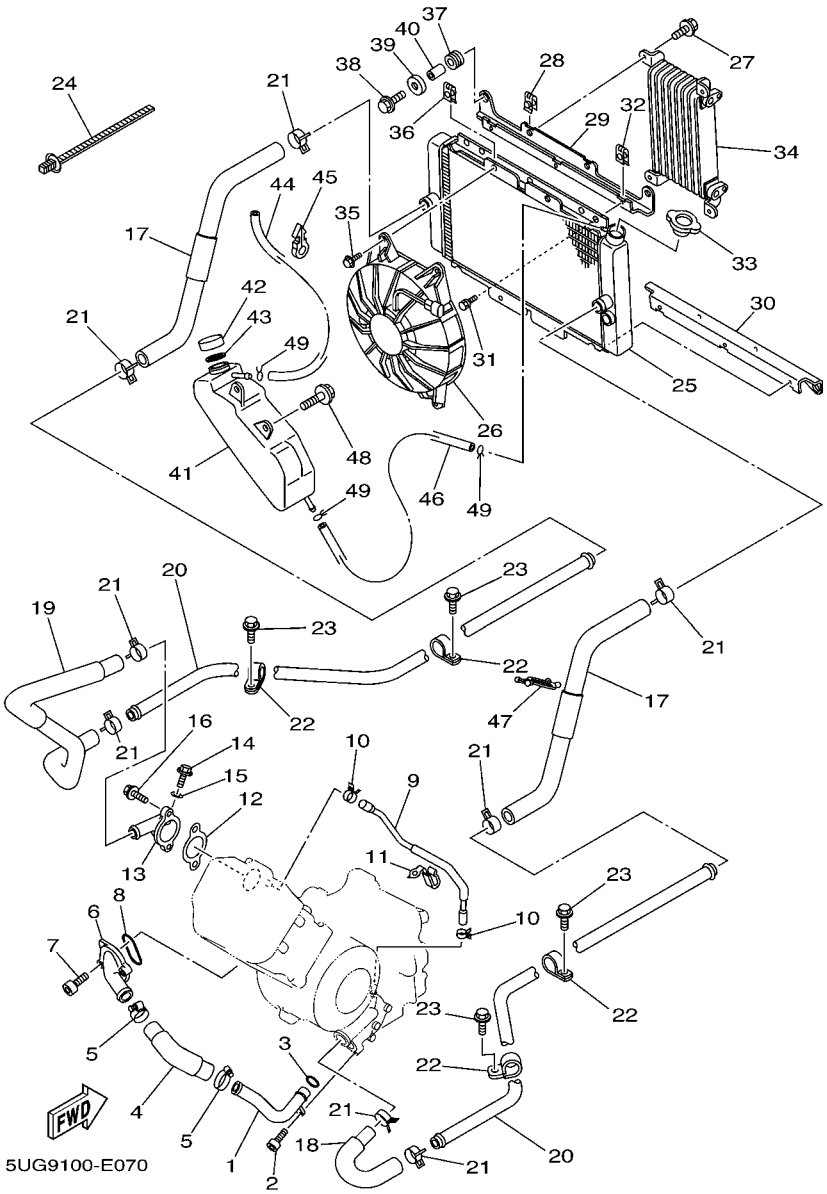

FIG. 7 RADIATOR & HOSE

REF. NO.	PART NO.	DESCRIPTION	USA	CAN				REMARKS
1	5KM–12481–00	PIPE 1	1	1				
2	91317–06010	BOLT	1	1				
3	93210–21190	O-RING	1	1				
4	5KM–12577–00	HOSE 2	1	1				
5	90450–32015	HOSE CLAMP ASSY	2	2				
6	5KM–12469–00	JOINT 1	1	1				
7	91317–06020	BOLT	2	2				
8	93210–33786	O-RING	1	1				
9	5KM–12579–00	HOSE 4	1	1				
10	90467–10038	CLIP	2	2				
11	90462–08008	CLAMP	1	1				
12	5KM–12434–00	GASKET	1	1				
13	5UG–12413–00	COVER, THERMOSTAT	1	1				
14	90338–06041	PLUG	1	1				
15	90430–06014	GASKET	1	1				
16	95027–06020	BOLT, FLANGE	2	2				
17	5UG–E2576–00	HOSE 1	2	2				
18	5UG–E2577–00	HOSE 2	1	1				
19	5UG–E2579–00	HOSE 4	1	1				
20	5UG–E2564–00	PIPE, WATER	2	2				
21	90467–26189	CLIP	8	8				
22	90461–12800	CLAMP	4	4				
23	90105–06831	BOLT, FLANGE	4	4				
24	90464–20005	CLAMP	2	2				
25	5UG–E2461–00	RADIATOR ASSY	1	1				
26	5UG–E2405–00	BLOWER ASSY	1	1				
27	5ND–E2675–00	BOLT, BLOWER HOLDING	4	4				

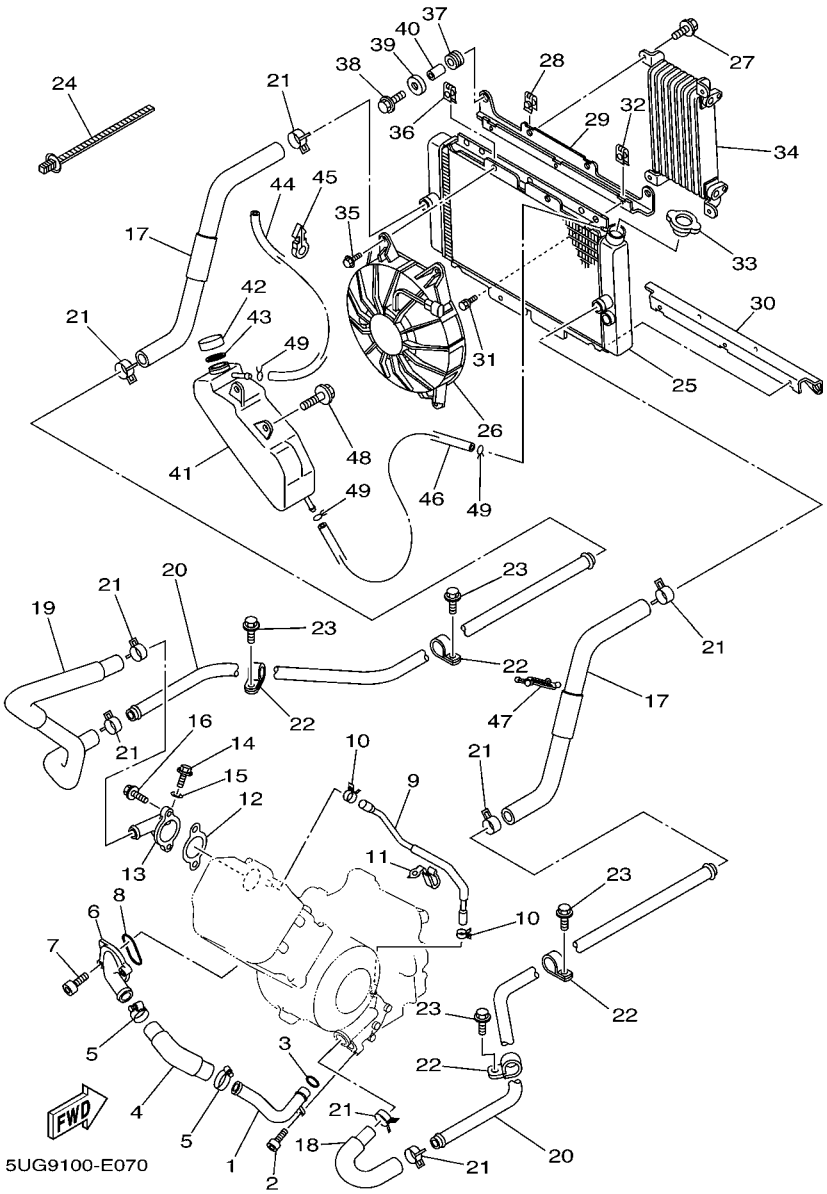

FIG. 7 RADIATOR & HOSE

REF. NO.	PART NO.	DESCRIPTION	USA	CAN				REMARKS
28	5ND–E2535–00	PLATE	4	4				
29	5UG–E244E–01	BRACKET 1	1	1				
30	5UG–E244F–00	BRACKET 2	1	1				
31	5UG–E2623–00	BOLT	6	6				
32	5ND–E2535–00	PLATE	6	6				
33	5ND–E2462–00	CAP, RADIATOR	1	1				
34	5UG–E3470–00	OIL COOLER ASSY	1	1				
35	5ND–E2675–00	BOLT, BLOWER HOLDING	4	4				
36	5ND–E2535–00	PLATE	4	4				
37	90480–15235	GROMMET	4	4				
38	90105–06833	BOLT, FLANGE	4	4				
39	90209–06012	WASHER	4	4				
40	90387–06113	COLLAR	4	4				
41	5GS–21871–00	TANK, RECOVERY	1	1				
42	26H–21875–00	CAP	1	1				
43	26H–21874–00	GASKET	1	1				
44	90445–08811	HOSE (L1020)	1	1				
45	90464–10833	CLAMP	2	2				
46	90445–08809	HOSE (L500)	1	1				
47	90464–29179	CLAMP	1	1				
48	90119–06868	BOLT, WITH WASHER	2	2				
49	90467–08003	CLIP	3	3				

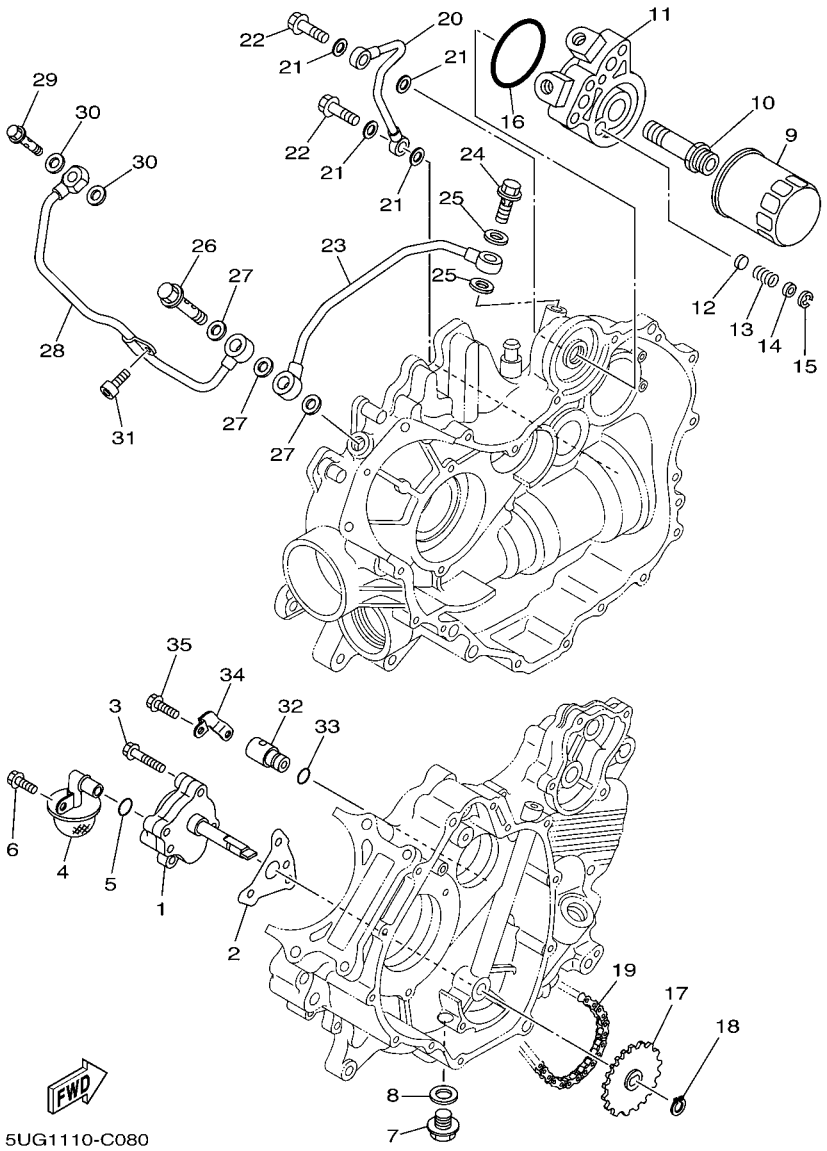

FIG. 8 OIL PUMP

REF. NO.	PART NO.	DESCRIPTION	USA	CAN				REMARKS
1	5KM–13300–00	OIL PUMP ASSY	1	1				
2	5KM–13329–00	GASKET, PUMP COVER	1	1				
3	95027–06040	BOLT, FLANGE	3	3				
4	5KM–13410–00	STRAINER HOUSING ASSY	1	1				
5	93210–14579	O-RING	1	1				
6	95027–06014	BOLT, FLANGE	1	1				
7	90340–14132	PLUG, STRAIGHT SCREW	1	1				
8	214–11198–01	GASKET	1	1				
9	5GH–13440–00	ELEMENT ASSY, OIL CLEANER	1	1				
10	90401–20162	BOLT, UNION	1	1				
11	5UG–13461–00	PLATE, ADAPTOR	1	1				
12	1YW–13497–00	PLUG	1	1				
13	90501–082E3	SPRING, COMPRESSION	1	1				
14	92907–06600	WASHER, PLATE	1	1				
15	93420–13073	CIRCLIP	1	1				
16	93210–57428	O-RING	1	1				
17	5KM–13355–00	SPROCKET, DRIVEN	1	1				
18	99009–11400	CIRCLIP	1	1				
19	94581–94070	CHAIN (DID25SD DHA)	1	1				
20	3AJ–13161–01	PIPE, DELIVERY 1	1	1				
21	90430–08204	GASKET	4	4				
22	90401–08004	BOLT, UNION	2	2				
23	5KM–13171–00	PIPE, DELIVERY 2	1	1				
24	90401–14118	BOLT, UNION	1	1				
25	90430–14043	GASKET	2	2				
26	5KM–12858–00	BOLT, UNION	1	1				
27	90430–14043	GASKET	3	3				

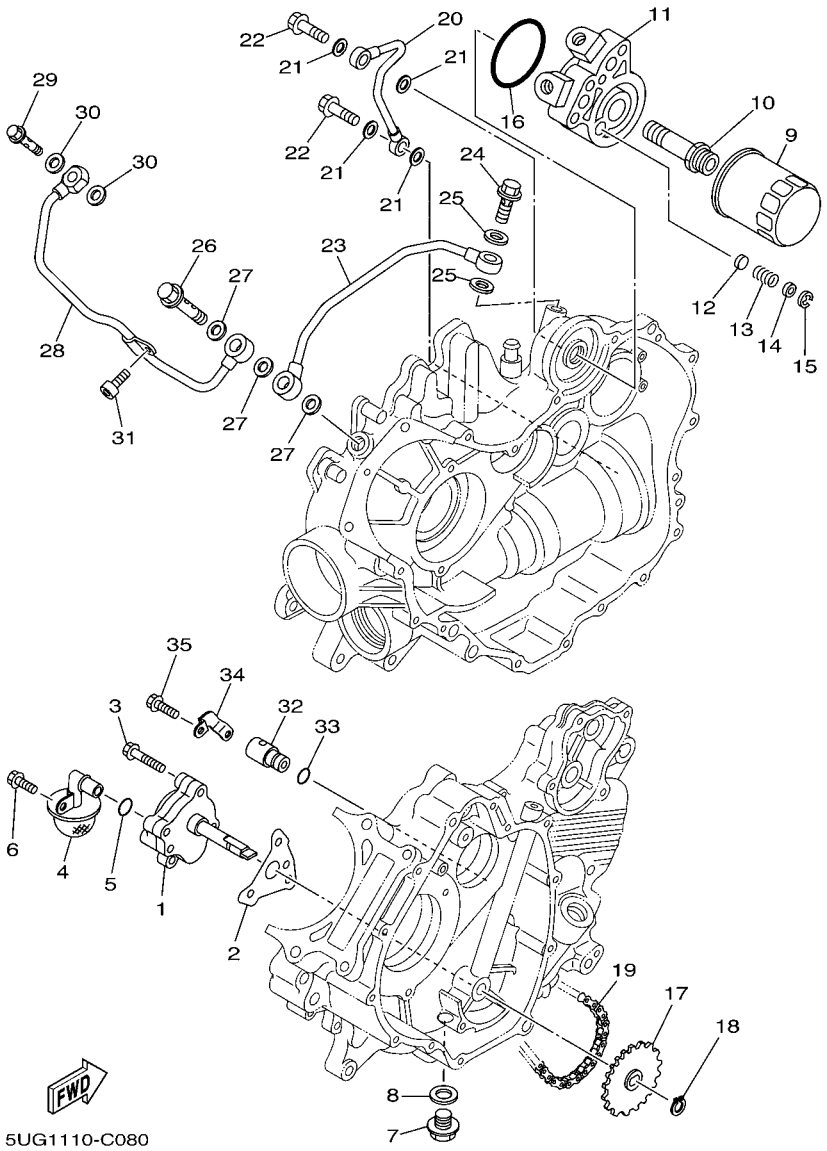

FIG. 8 OIL PUMP

REF. NO.	PART NO.	DESCRIPTION	USA	CAN				REMARKS
28	5KM–13181–00	PIPE, DELIVERY 3	1	1				
29	90401–10159	BOLT, UNION	1	1				
30	90430–10188	GASKET	2	2				
31	91317–06012	BOLT	1	1				
32	5KM–13490–00	RELIEF VALVE ASSY	1	1				
33	93210–10096	O-RING	1	1				
34	5KM–1319K–00	PLATE	1	1				
35	95027–06012	BOLT, FLANGE	2	2				

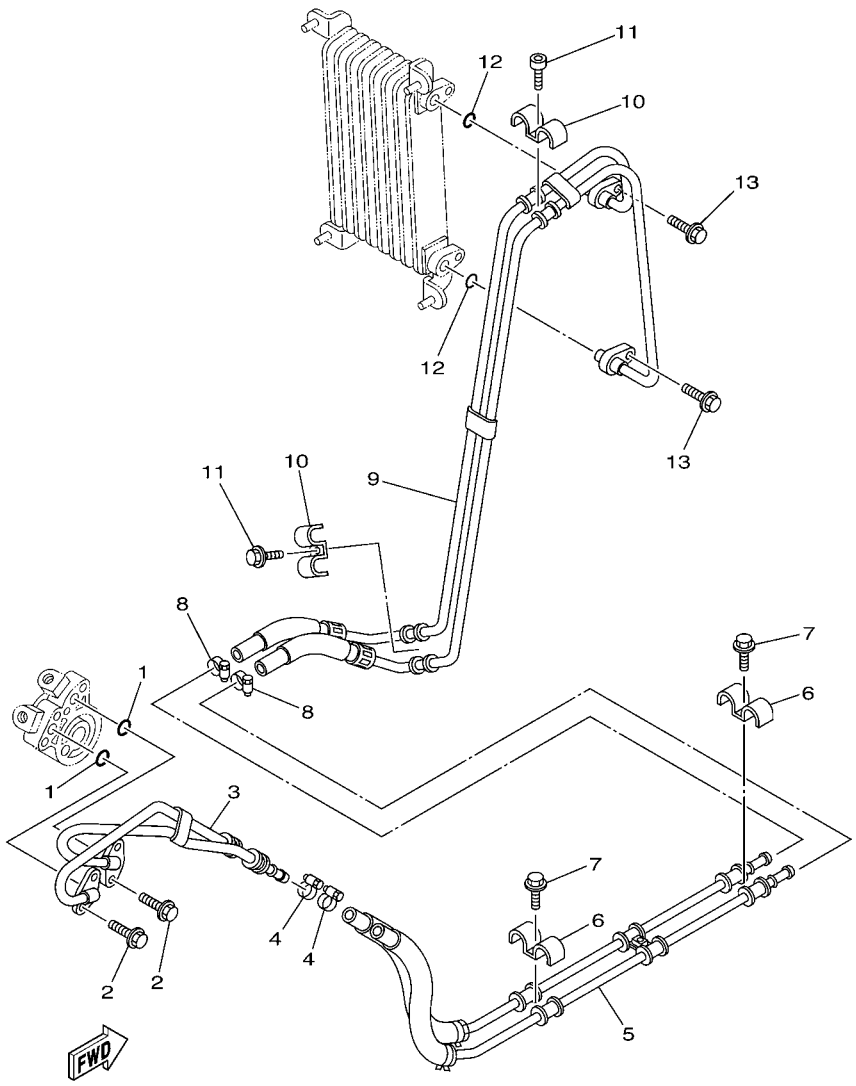

5UG9100-E090

FIG. 9 OIL PIPE

REF. NO.	PART NO.	DESCRIPTION	USA	CAN				REMARKS
1	93210–10197	O-RING	2	2				
2	95027–06016	BOLT, FLANGE	4	4				
3	5UG–E3416–00	PIPE, OIL 1	1	1				
4	90450–22017	HOSE CLAMP ASSY	2	2				
5	5UG–E3406–01	OIL PIPE COMP. 2	1	1				
6	90462–15800	CLAMP	2	2				
7	90105–06832	BOLT, FLANGE	2	2				
8	90450–22017	HOSE CLAMP ASSY	2	2				
9	5UG–E3405–00	OIL PIPE COMP. 1	1	1				
10	90462–15800	CLAMP	2	2				
11	90105–06832	BOLT, FLANGE	2	2				
12	93210–11M59	O-RING	2	2				
13	95807–06020	BOLT, FLANGE	2	2				

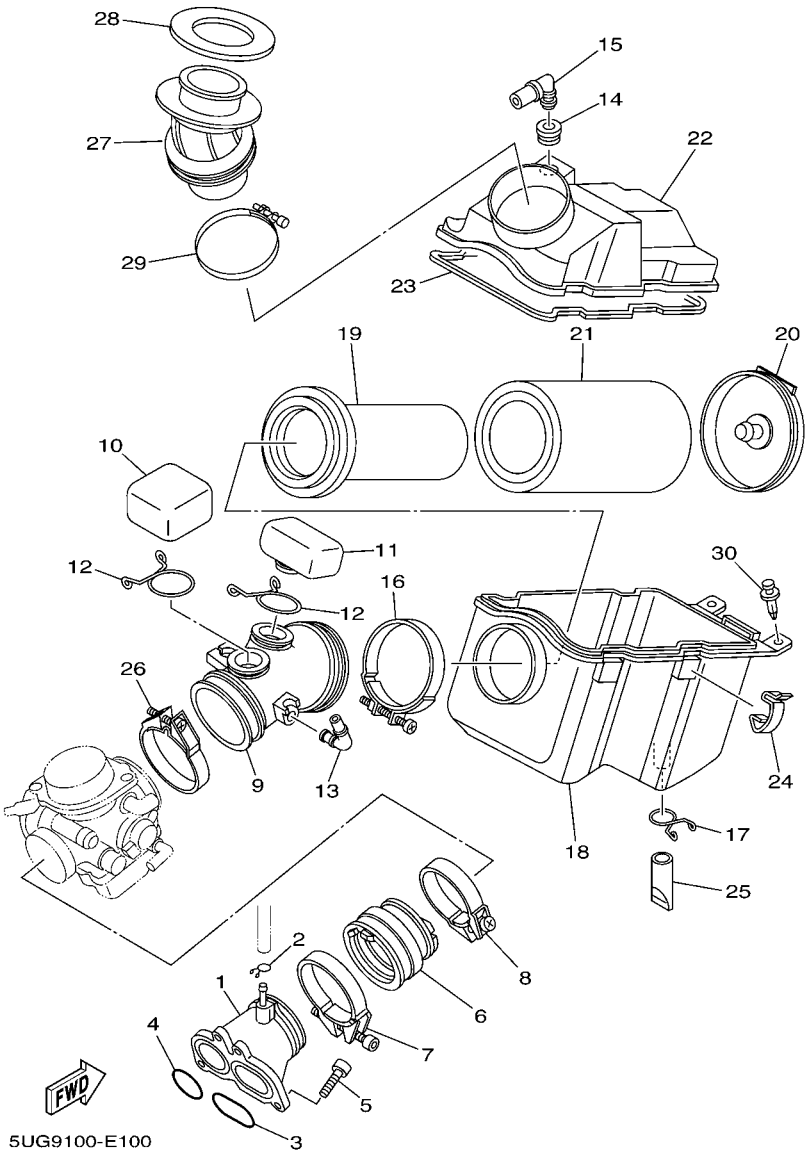

FIG. 10 INTAKE

REF. NO.	PART NO.	DESCRIPTION	USA	CAN				REMARKS
1	5UG–13586–00	JOINT, CARBURETOR 1	1	1				
2	90467–08017	CLIP	1	1				
3	93210–44545	O-RING	1	1				
4	93210–321A8	O-RING	1	1				
5	91317–06020	BOLT	4	4				
6	5KM–13596–00	JOINT, CARBURETOR 2	1	1				
7	90450–65001	HOSE CLAMP ASSY	1	1				
8	90450–59004	HOSE CLAMP ASSY	1	1				
9	5UG–E4453–10	JOINT, AIR CLEANER 1	1	1				
10	5UG–E3581–00	CHAMBER, AIR	1	1				
11	5UG–E3591–00	CHAMBER, AIR 2	1	1				
12	5UG–E4137–00	CLIP	2	2				
13	31A–14419–00	PIPE	1	1				
14	31A–14435–00	GROMMET	1	1				
15	5KM–14419–00	PIPE	1	1				
16	90450–75001	HOSE CLAMP ASSY	1	1				
17	5UH–E4438–00	CLIP, DRAIN CLEANER	1	1				
18	5UG–E4411–00	CASE, AIR CLEANER 1	1	1				
19	5UG–E4458–00	GUIDE	1	1				
20	5UH–E4468–00	PLATE,ELEMENT FITTING	1	1				
21	5UG–E4451–00	ELEMENT, AIR CLEANER	1	1				
22	5UG–E4412–01	CAP, CLEANER CASE 1	1	1				
23	5UG–E4462–00	SEAL	1	1				
24	5UH–E4424–00	CLIP, CAP FITTING	4	4				
25	5UG–E4769–00	PIPE, DRAIN	1	1				
26	90450–67002	HOSE CLAMP ASSY	1	1				
27	5UG–E4437–00	DUCT	1	1				

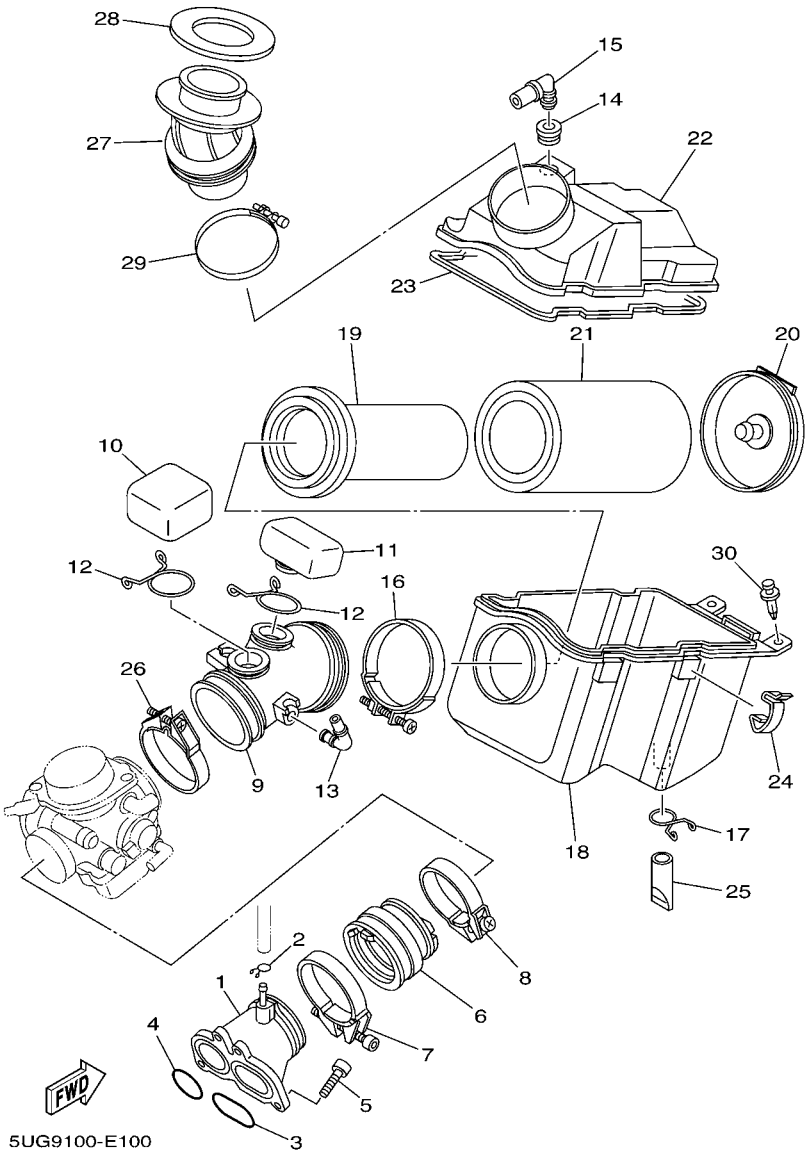

FIG. 10 INTAKE

REF. NO.	PART NO.	DESCRIPTION	USA	CAN				REMARKS
28	5UG–E4476–00	SEAL	1	1				
29	90450–75001	HOSE CLAMP ASSY	1	1				
30	90269–08813	RIVET	2	2				

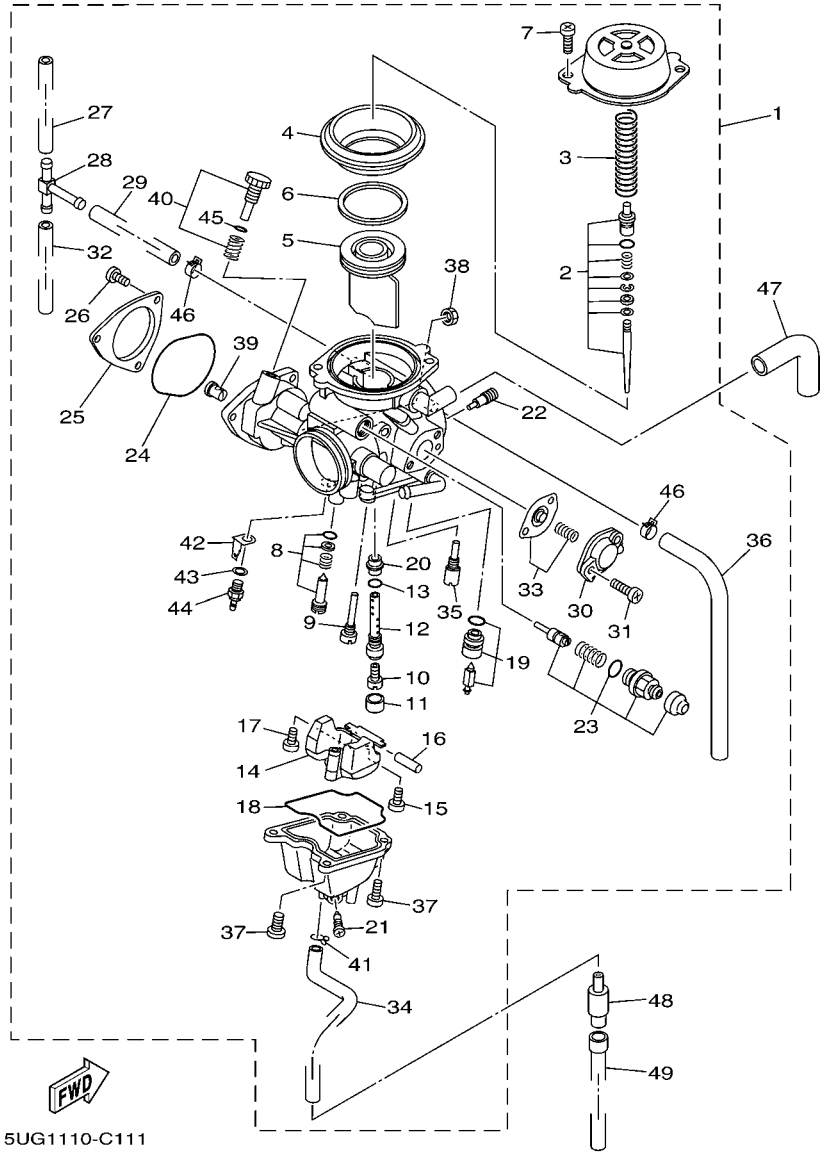

FIG. 11 CARBURETOR

REF. NO.	PART NO.	DESCRIPTION	USA	CAN				REMARKS
1	5UG–14901–10	CARBURETOR ASSY 1	1	1				
2	5UG–1490J–00	.NEEDLE SET	1	1				
3	4KM–14933–00	.SPRING, DIAPHRAGM	1	1				
4	5KM–24411–00	.DIAPHRAGM	1	1				
5	5KM–14912–00	.VALVE, THROTTLE	1	1				
6	5KM–14918–00	.RING	1	1				
7	98507–05008	.SCREW, PAN HEAD	2	2				
8	5EA–14105–00	.PILOT SCREW SET	1	1				
9	3G2–14231–11	.JET, POWER (# 55)	1	1				
10	3G2–14231–29	.JET, MAIN (#145)	1	1				
11	5GH–14918–00	.RING	1	1				
12	5GH–14261–00	.HOLDER	1	1				
13	583–14561–00	.O-RING	1	1				
14	5DM–14985–00	.FLOAT	1	1				
15	98507–04008	.SCREW, PAN HEAD	1	1				
16	127–14186–00	.PIN, FLOAT	1	1				
17	1FN–14565–00	.SCREW	1	1				
18	5DM–14561–00	.O-RING	1	1				
19	5KM–14190–23	.NEEDLE VALVE ASSY	1	1				
20	5DM–1414M–30	.NOZZLE, MAIN	1	1				
21	12R–14191–00	.PLUG, DRAIN	1	1				
22	1HX–14231–12	.JET, MAIN (# 60)	1	1				
23	5KM–1410A–00	.STARTER SET	1	1				
24	4WV–14147–10	.O-RING	1	1				
25	5UG–14293–00	.COVER 1	1	1				
26	98507–04006	.SCREW, PAN HEAD	3	3				
27	5GJ–14197–00	.PIPE	1	1				

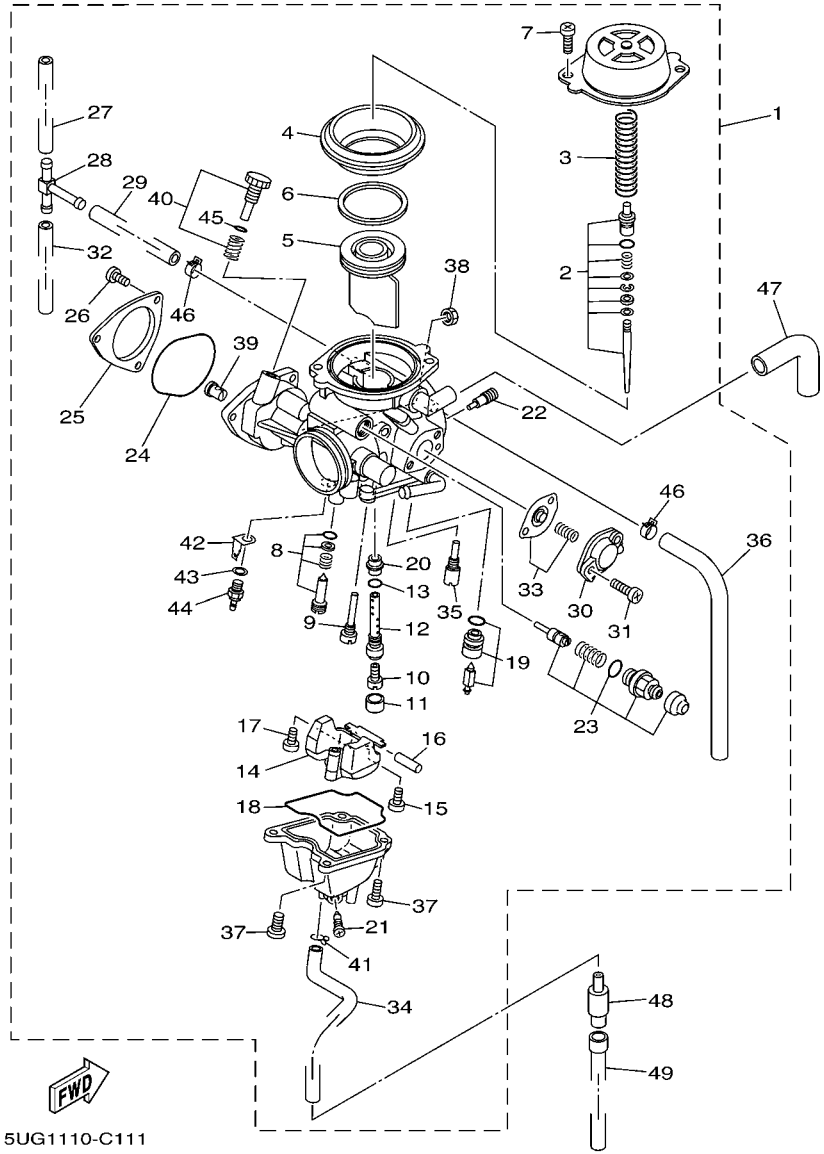

FIG. 11 CARBURETOR

REF. NO.	PART NO.	DESCRIPTION	USA	CAN				REMARKS
28	28V–14988–00	.PIPE, STARTER CONNECTING	1	1				
29	3CF–14197–00	.PIPE	1	1				
30	5AP–14280–00	.COVER, CARBURETOR	1	1				
31	97607–04114	.SCREW,WITH WASHER	2	2				
32	5KM–14197–10	.PIPE	1	1				
33	5KM–1490H–00	.DIAPHRAGM SET 5	1	1				
34	31A–14197–00	.PIPE	1	1				
35	4KM–14142–40	.JET, PILOT (# 40)	1	1				
36	5UG–14197–00	.PIPE	1	1				
37	98507–04010	.SCREW, PAN HEAD	4	4				
38	522–14161–00	.NUT, CABLE ADJUSTING	1	1				
39	1UY–14155–00	.GUIDE, CABLE	1	1				
40	5UG–14103–10	.THROTTLE SCREW SET	1	1				
41	55X–14937–00	.CLIP	1	1				
42	5FU–82103–00	.TERMINAL 1	1	1				
43	90201–08016	.WASHER, PLATE	1	1				
44	5FU–83790–00	.HEATER ASSY (15W)	1	1				
45	2H0–14147–00	.O-RING	1	1				
46	4BP–14139–01	.CLIP, PIPE	2	2				
47	4WV–14349–00	PIPE	1	1				
48	24W–14193–00	PIPE	1	1				
49	91A20–07010	TUBE, FLEXIBLE VINYL	1	1				

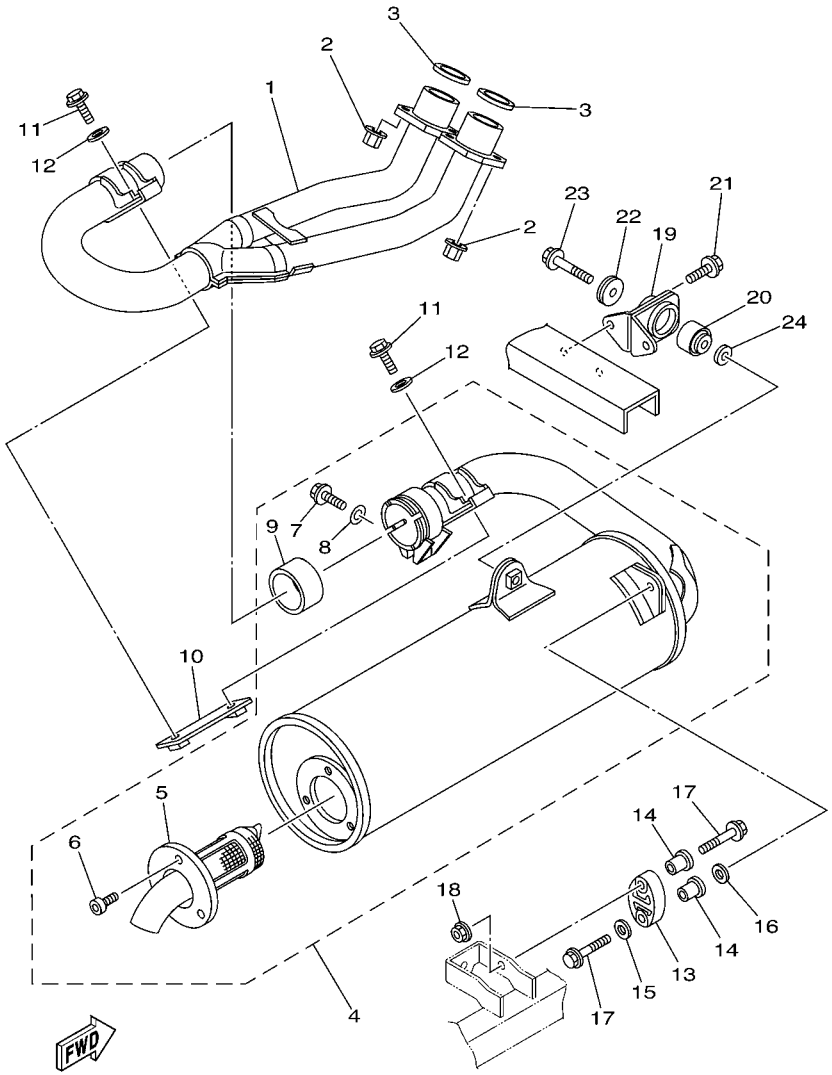

5UG9100-E120

FIG. 12 EXHAUST

REF. NO.	PART NO.	DESCRIPTION	USA	CAN				REMARKS
1	5UG–E4611–01	PIPE, EXHAUST 1	1	1				
2	90179–08410	NUT	4	4				
3	3YF–14613–01	GASKET, EXHAUST PIPE	2	2				
4	5UG–E4710–01	MUFFLER ASSY 1	1	1				
5	5UG–E4752–00	.PIPE, OUTLET	1	1				
6	5ND–E4719–00	.BOLT, MUFFLER	3	3				
7	5UG–E4777–00	.BOLT	1	1				
8	5ND–E4759–00	.WASHER	1	1				
9	5UG–E4755–00	.GASKET, SILENCER	1	1				
10	5UG–E4639–00	STAY, EXHAUST PIPE 1	1	1				
11	95817–06020	BOLT, FLANGE	2	2				
12	90201–06778	WASHER, PLATE	2	2				
13	5UG–14737–00	DAMPER, MUFFLER	1	1				
14	90387–066J1	COLLAR	2	2				
15	90201–06023	WASHER, PLATE	1	1				
16	90201–05016	WASHER, PLATE	1	1				
17	95827–06035	BOLT, FLANGE	2	2				
18	95707–06500	NUT, FLANGE	1	1				
19	5UG–F1440–00	MUFF STAY SUB-KUMI	1	1				
20	5KM–27414–01	DAMPER	1	1				
21	95817–08016	BOLT, FLANGE	2	2				
22	90209–08249	WASHER	1	1				
23	95807–08040	BOLT, FLANGE	1	1				
24	90201–07008	WASHER, PLATE	1	1				

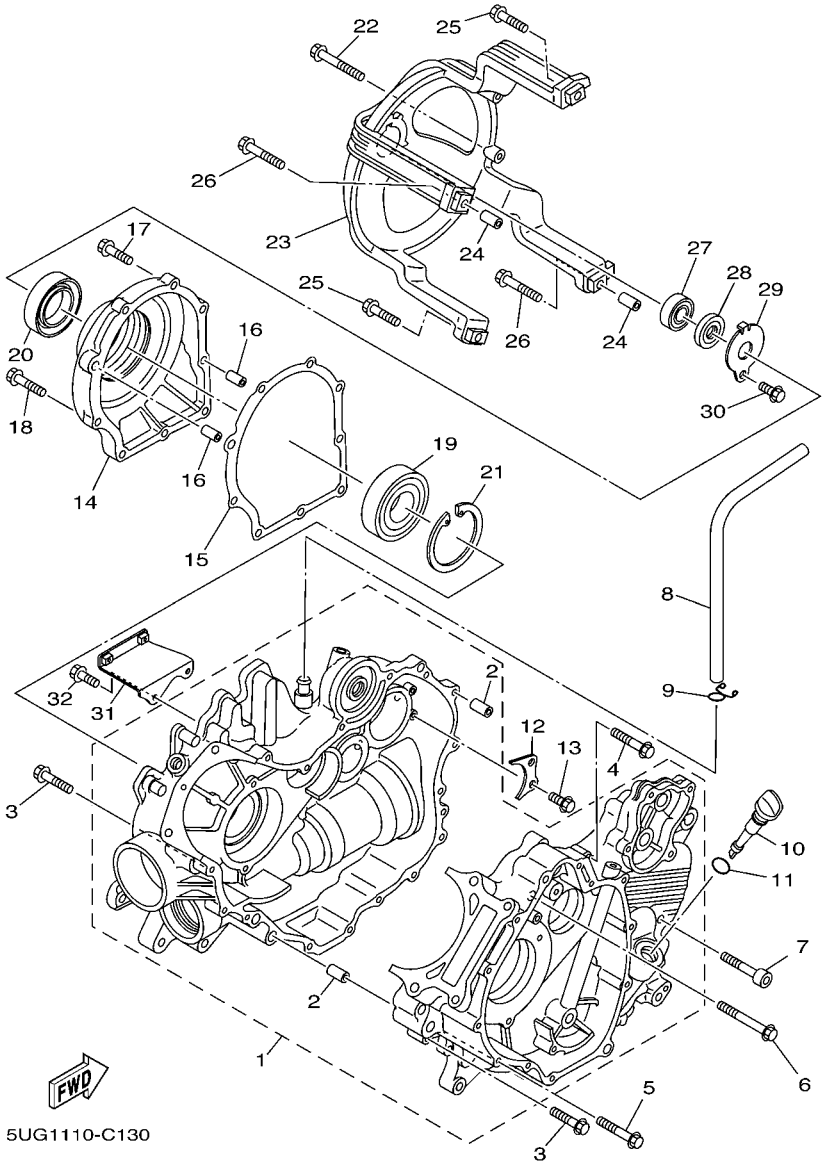

FIG. 13 CRANKCASE

REF. NO.	PART NO.	DESCRIPTION	USA	CAN				REMARKS
1	5KM–15100–11	CRANKCASE ASSY	1	1				
2	99530–10116	.PIN, DOWEL	2	2				
3	95027–06030	BOLT, FLANGE	11	11				
4	90105–06031	BOLT, FLANGE	1	1				
5	95027–06040	BOLT, FLANGE	2	2				
6	95027–06055	BOLT, FLANGE	1	1				
7	91317–08040	BOLT	3	3				
8	5UG–11166–00	PIPE, BREATHER 1	1	1				
9	90467–14015	CLIP	1	1				
10	5UG–15362–00	PLUG, OIL LEVEL	1	1				
11	93210–19026	O-RING	1	1				
12	4WV–15388–00	PLATE, BEARING COVER	1	1				
13	95027–06014	BOLT, FLANGE	2	2				
14	5KM–15163–00	HOUSING, BEARING 1	1	1				
15	5KM–15463–00	GASKET, CARBURETOR COVER 2	1	1				
16	99530–10116	PIN, DOWEL	2	2				
17	95027–06030	BOLT, FLANGE	7	7				
18	95027–06040	BOLT, FLANGE	2	2				
19	93316–01003	BEARING	1	1				
20	93102–35004	OIL SEAL	1	1				
21	99009–80500	CIRCLIP	1	1				
22	95827–06050	BOLT, FLANGE	2	2				
23	5KM–15442–00	HOUSING, BEARING	1	1				
24	99530–10116	PIN, DOWEL	2	2				
25	95827–06030	BOLT, FLANGE	2	2				
26	95827–06040	BOLT, FLANGE	2	2				
27	93306–20120	BEARING	1	1				

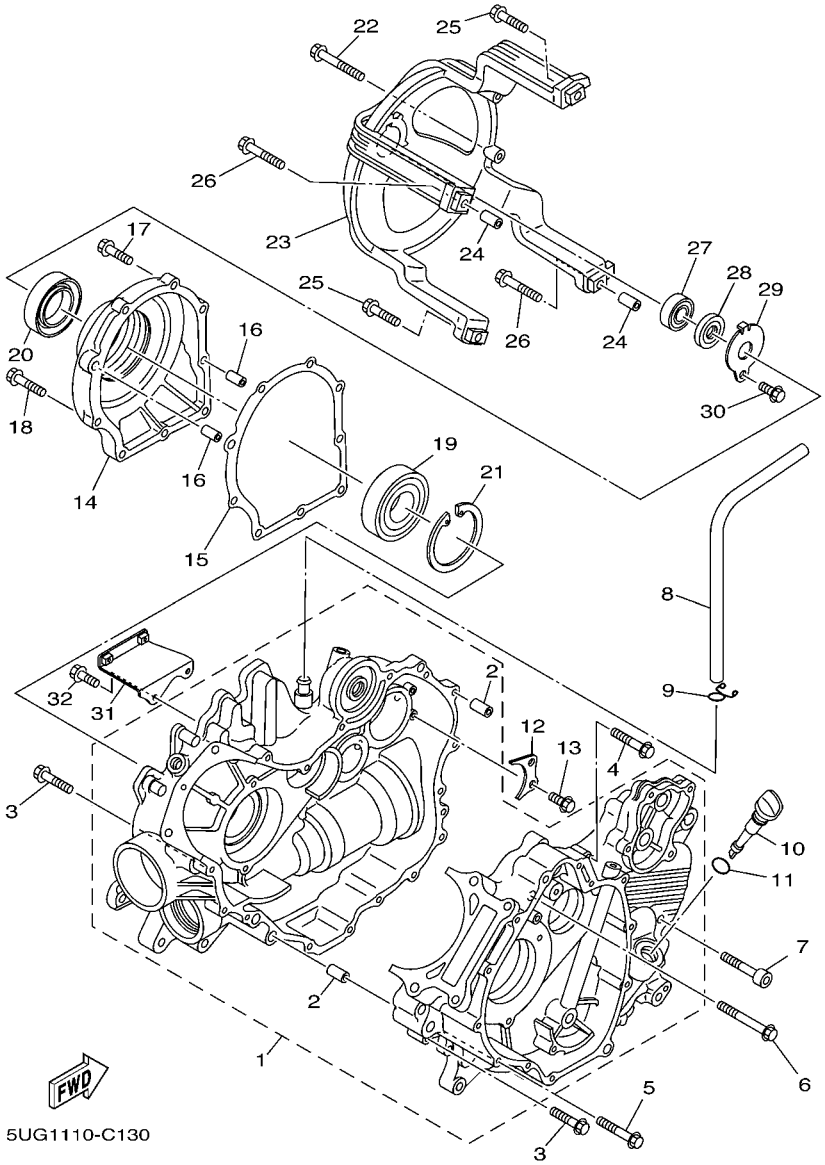

FIG. 13 CRANKCASE

REF. NO.	PART NO.	DESCRIPTION	USA	CAN				REMARKS
28	93101–12168	OIL SEAL	1	1				
29	4WV–15381–00	PLATE, BEARING COVER	1	1				
30	95027–06012	BOLT, FLANGE	1	1				
31	5UG–15199–00	BRACKET	1	1				
32	95817–06016	BOLT, FLANGE	2	2				

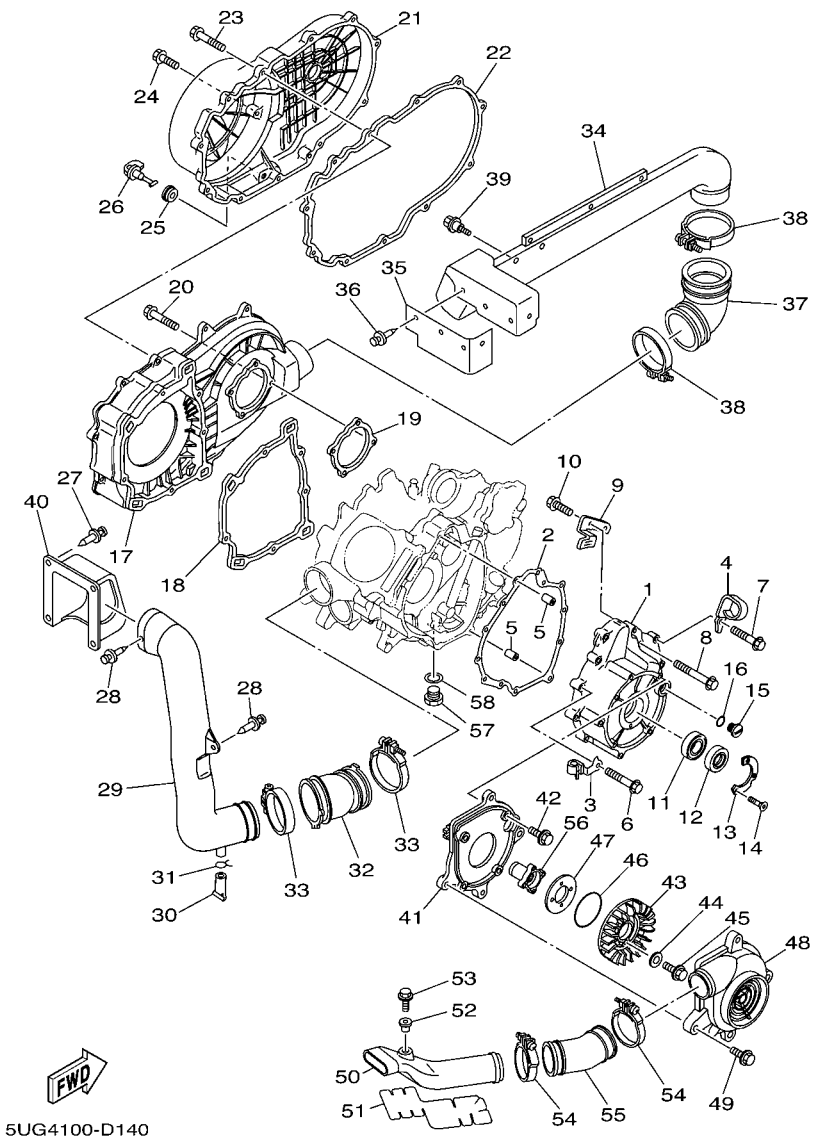

5UG4100-D140

FIG. 14 CRANKCASE COVER 1

REF. NO.	PART NO.	DESCRIPTION	USA	CAN				REMARKS
1	5KM–15411–10	COVER, CRANKCASE 1	1	1				
2	5KM–15451–00	GASKET, CRANKCASE COVER 1	1	1				
3	90465–08361	CLAMP	1	1				
4	90462–08021	CLAMP	1	1				
5	99530–10116	PIN, DOWEL	2	2				
6	95027–06030	BOLT, FLANGE	8	8				
7	90105–06031	BOLT, FLANGE	1	1				
8	95027–06040	BOLT, FLANGE	4	4				
9	5KM–15113–00	PLATE	1	1				
10	95027–06014	BOLT, FLANGE	2	2				
11	93306–07801	BEARING	1	1				
12	93102–28476	OIL SEAL	1	1				
13	21V–15719–00	WASHER, THRUST	1	1				
14	90151–05023	SCREW, COUNTERSUNK	2	2				
15	90340–14117	PLUG, STRAIGHT SCREW	1	1				
16	93210–14369	O-RING	1	1				
17	5KM–15421–00	COVER, CRANKCASE 2	1	1				
18	5KM–15453–00	GASKET	1	1				
19	5KM–15315–00	SEAL, CRANKCASE	1	1				
20	95827–06030	BOLT, FLANGE	7	7				
21	5KM–15431–00	COVER, CRANKCASE 3	1	1				
22	5KM–15379–00	SEAL, CRANKCASE	1	1				
23	95827–06025	BOLT, FLANGE	12	12				
24	95827–06016	BOLT, FLANGE	2	2				
25	90480–13018	GROMMET	1	1				
26	5KM–15351–00	PLUG, DRAIN	1	1				
27	90269–06800	RIVET	4	4				

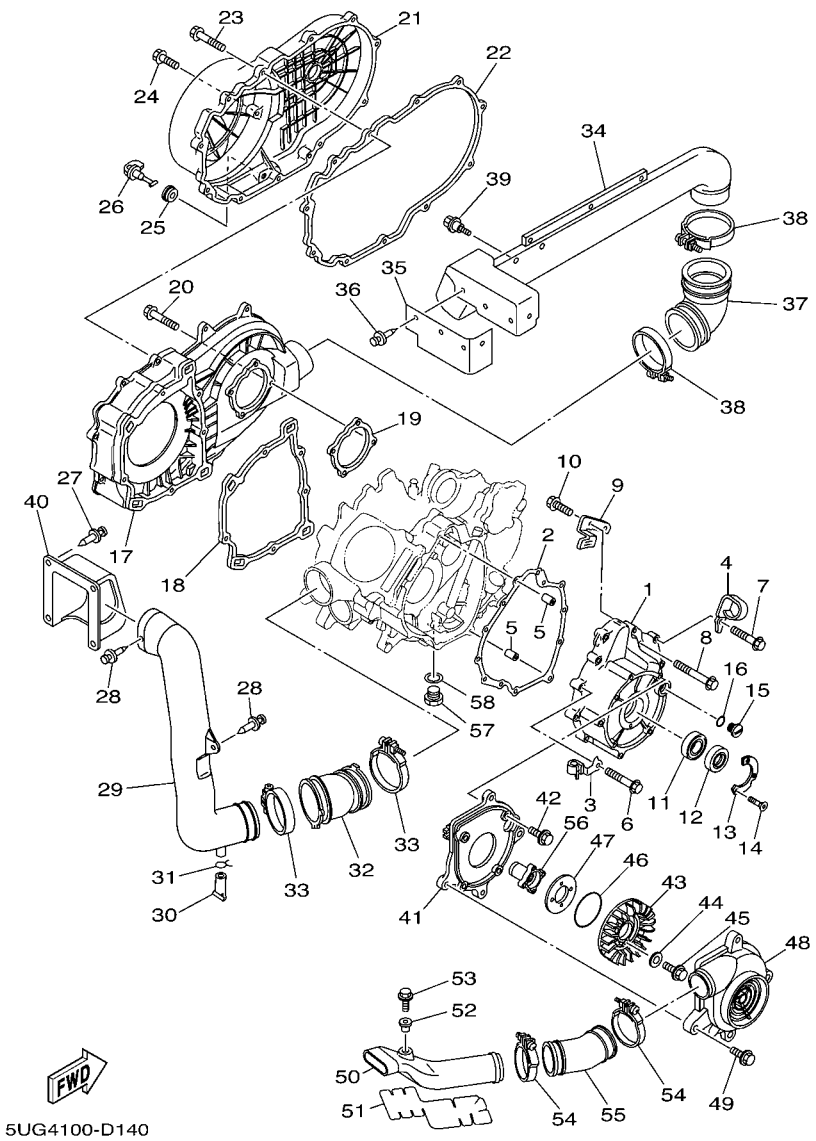

FIG. 14 CRANKCASE COVER 1

REF. NO.	PART NO.	DESCRIPTION	USA	CAN				REMARKS
28	90269–06800	RIVET	2	2				
29	5UG–E5471–10	DUCT, AIR	1	1				
30	5BF–1443E–00	PIPE, DRAIN	1	1				
31	90467–16195	CLIP	1	1				
32	5KM–15472–01	SEAL, AIR DUCT	1	1				
33	90450–81001	HOSE CLAMP ASSY	2	2				
34	5UG–E5473–00	DUCT, AIR	1	1				
35	5UG–E5499–00	PROTECTOR, COVER	1	1				
36	90269–06800	RIVET	4	4				
37	5KM–15474–00	SEAL, AIR DUCT	1	1				
38	90450–85001	HOSE CLAMP ASSY	2	2				
39	90109–063F1	BOLT	2	2				
40	5UG–F172W–00	COVER	1	1				
41	5UG–12653–00	AIR SHROUD, CYLINDER 3	1	1				
42	95827–06020	BOLT, FLANGE	4	4				
43	52W–12611–02	FAN	1	1				
44	92907–06200	WASHER	2	2				
45	95827–06020	BOLT, FLANGE	2	2				
46	93210–64488	O-RING	1	1				
47	5UG–12681–00	PLATE	1	1				
48	5UG–12651–00	AIR SHROUD, CYLINDER 1	1	1				
49	95827–06020	BOLT, FLANGE	4	4				
50	5UG–E2691–00	DUCT, 1	1	1				
51	5UG–F1575–00	SEAL 1	1	1				
52	90179–06520	NUT	1	1				
53	95827–06020	BOLT, FLANGE	1	1				
54	90450–64002	HOSE CLAMP ASSY	2	2				

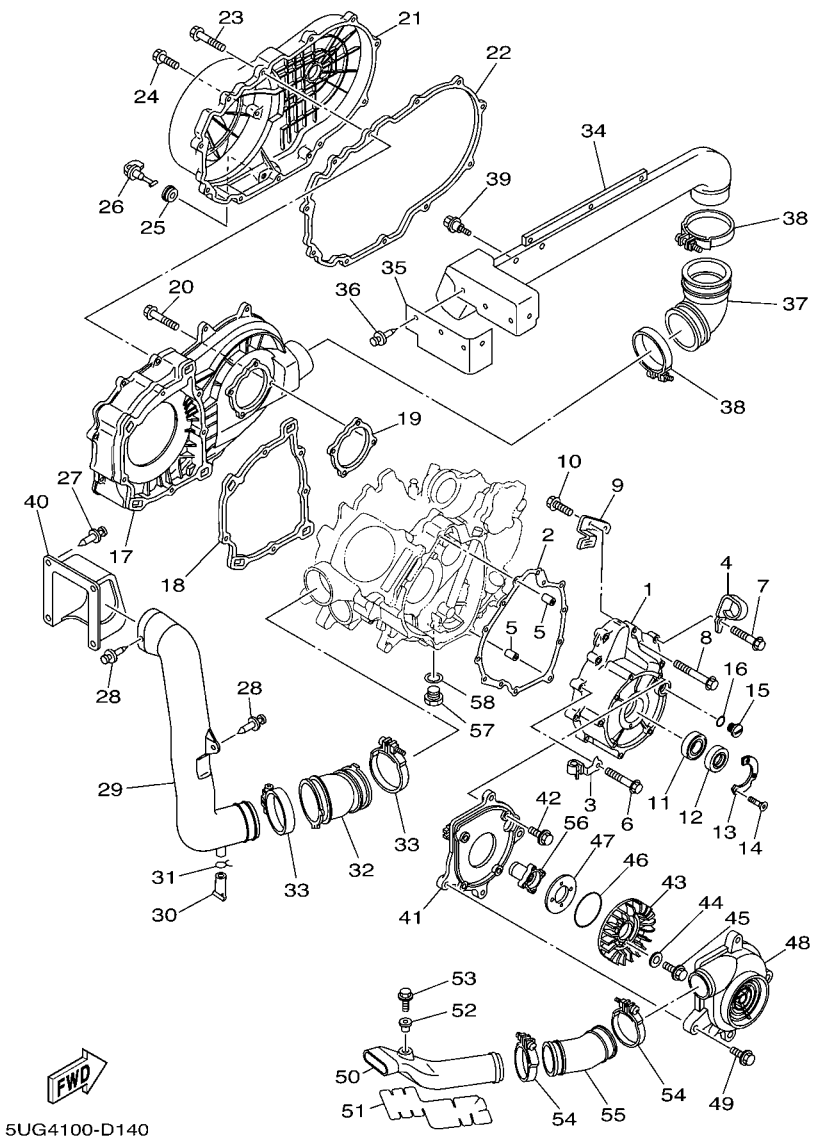

5UG4100-D140

FIG. 14 CRANKCASE COVER 1

REF. NO.	PART NO.	DESCRIPTION	USA	CAN				REMARKS
55	5UG–E2695–00	JOINT 1	1	1				
56	5UG–15777–00	BOSS, STARTER PULLEY	1	1				
57	90340–14036	PLUG, STRAIGHT SCREW	1	1				
58	90430–14043	GASKET	1	1				

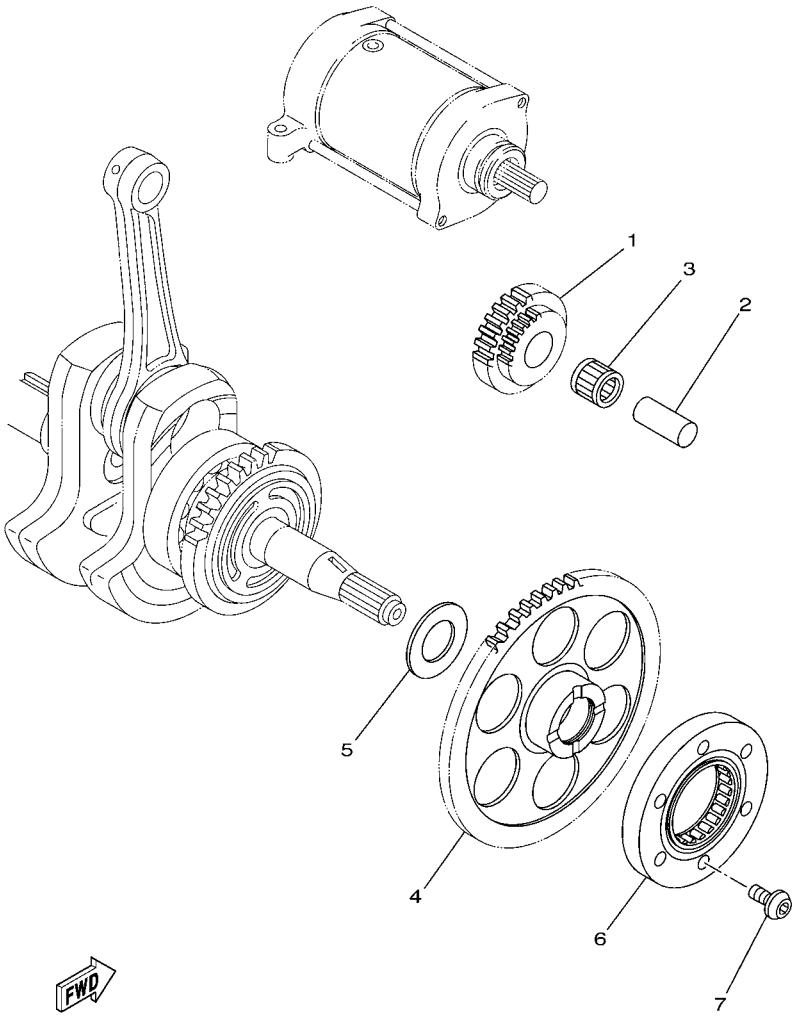

5UG1110-C150

FIG. 15 STARTER CLUTCH

REF. NO.	PART NO.	DESCRIPTION	USA	CAN				REMARKS
1	5GH–15512–00	GEAR, IDLER 1	1	1				
2	5KM–15522–00	SHAFT 2	1	1				
3	93310–212R6	BEARING	1	1				
4	5KM–15517–10	GEAR, IDLER 2	1	1				
5	90201–25291	WASHER, PLATE	1	1				
6	5KM–15590–00	STARTER ONE-WAY ASSY	1	1				
7	91317–08016	BOLT	3	3				

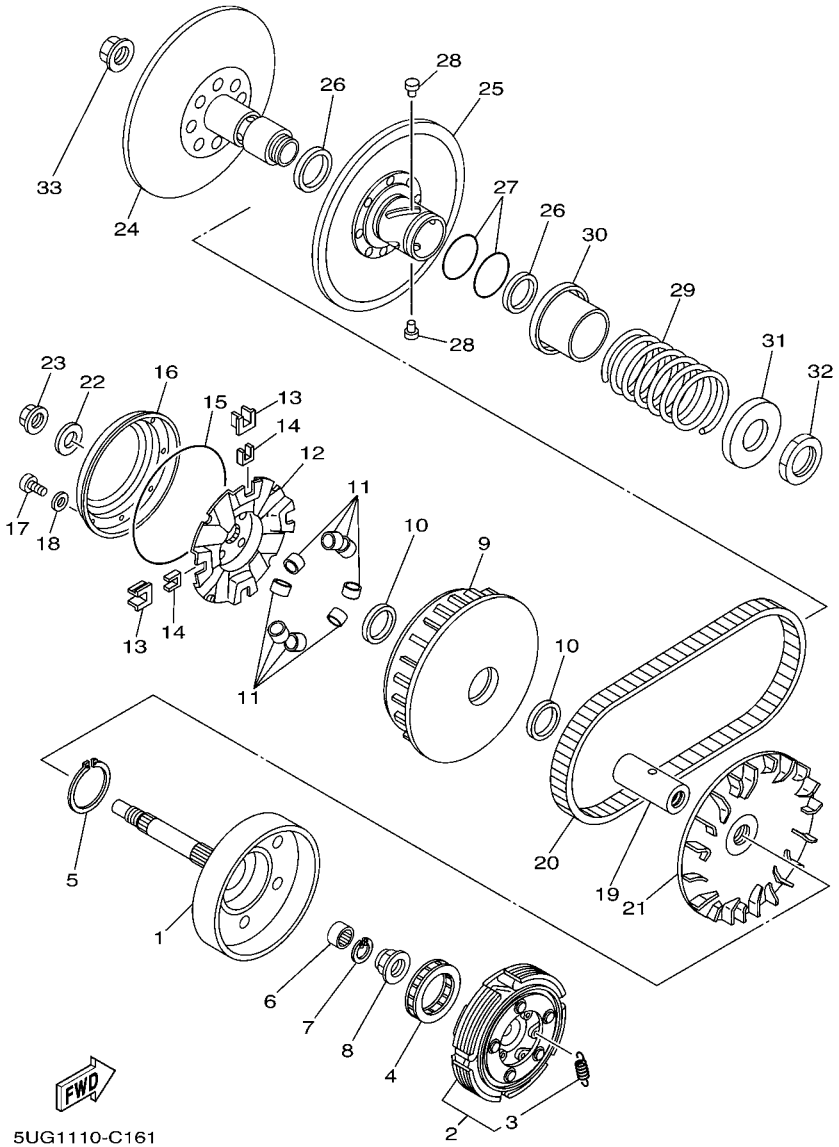

FIG. 16 CLUTCH

REF. NO.	PART NO.	DESCRIPTION	USA	CAN				REMARKS
1	5KM–16611–10	CLUTCH HOUSING COMP.	1	1				
2	5KM–16620–00	CLUTCH CARRIER ASSY	1	1				
3	5KM–16626–00	.SPRING, CLUTCH WEIGHT 1	5	5				
4	4SH–16664–00	BEARING, ONE WAY	1	1				
5	93410–46079	CIRCLIP	1	1				
6	93315–21813	BEARING	1	1				
7	93450–24062	CIRCLIP	1	1				
8	90179–22005	NUT	1	1				
9	5UG–17620–00	PRIMARY SLIDING SHEAVE COMP.	1	1				
10	93101–35001	OIL SEAL	2	2				
11	5KM–17632–00	WEIGHT	8	8				
12	5KM–17623–00	CAM	1	1				
13	4WV–17653–00	SLIDER	4	4				
14	4WV–17654–01	SPACER 1	4	4				
15	93211–594A4	O-RING	1	1				
16	4WV–17639–10	STOPPER	1	1				
17	90157–04088	SCREW, PAN HEAD	8	8				
18	90201–047R9	WASHER, PLATE	8	8				
19	5KM–17645–00	COLLAR	1	1				
20	5KM–17641–00	V-BELT	1	1				
21	5KM–17611–00	SHEAVE, PRIMARY FIXED	1	1				
22	90201–190T7	WASHER, PLATE	1	1				
23	90179–16001	NUT	1	1				
24	4WV–17660–10	SECONDARY FIXED SHEAVE COMP.	1	1				
25	4WV–17670–00	SECONDARY SLIDING SHEAVE	1	1				
26	93104–41119	OIL SEAL	2	2				
27	93210–44545	O-RING	2	2				

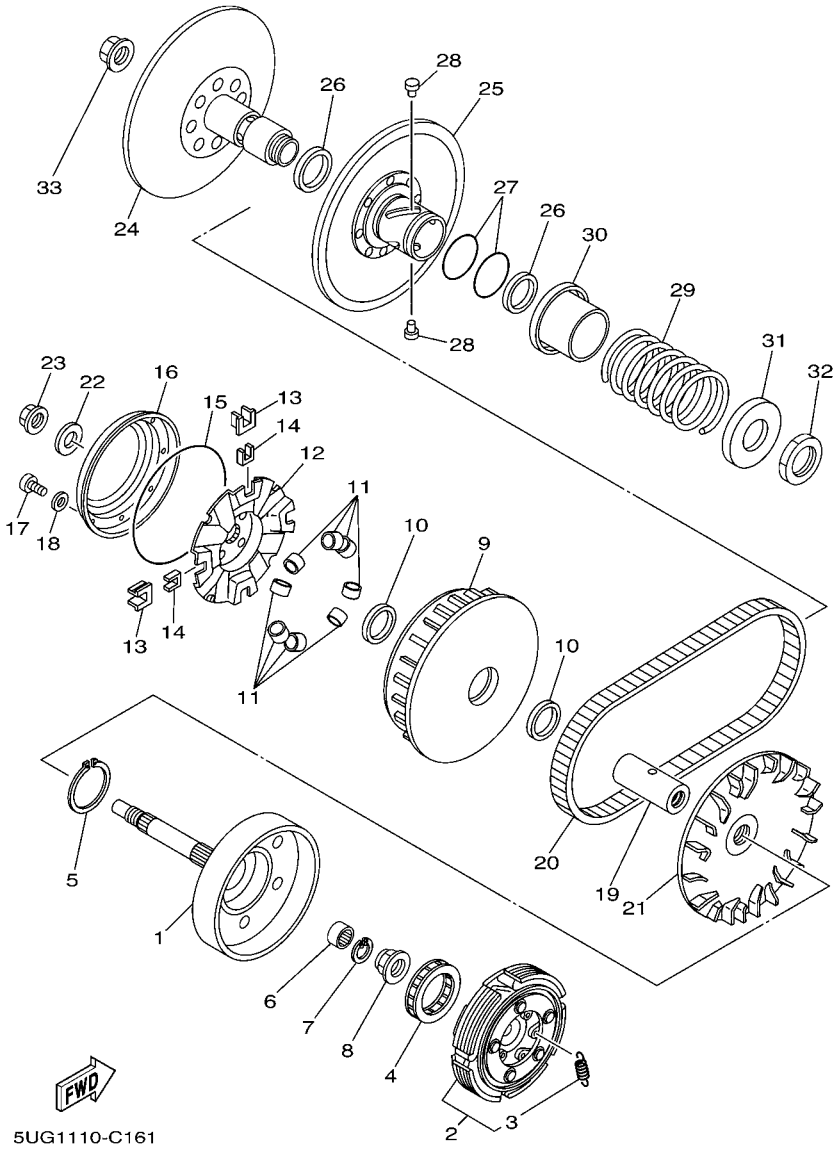

FIG. 16 CLUTCH

REF. NO.	PART NO.	DESCRIPTION	USA	CAN				REMARKS
28	4CW–17664–00	PIN, GUIDE	4	4				
29	90501–65001	SPRING, COMPRESSION	1	1				
30	4WV–17684–00	SEAT, SECONDARY SPRING	1	1				
31	4WV–17644–00	SEAT,SPRING	1	1				
32	90170–36279	NUT	1	1				
33	90179–16001	NUT	1	1				

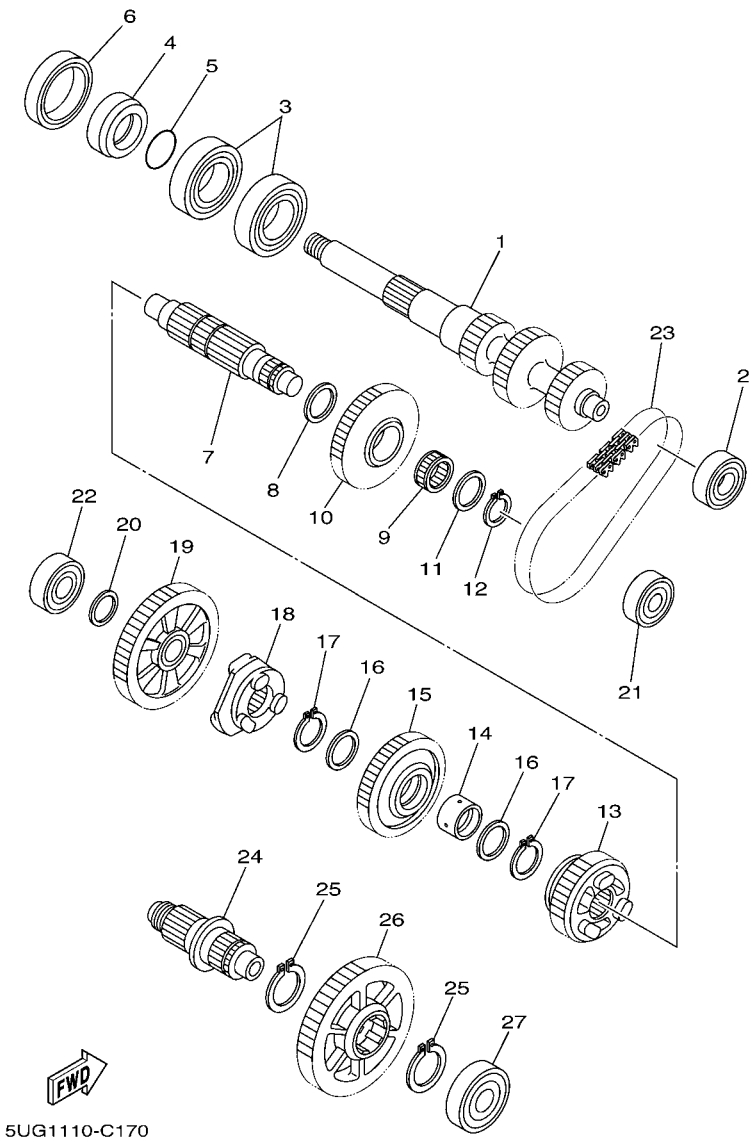

FIG. 17 TRANSMISSION

REF. NO.	PART NO.	DESCRIPTION	USA	CAN				REMARKS
1	5UG–17681–00	SHAFT, SECONDARY	1	1				
2	93306–20321	BEARING	1	1				
3	93306–00612	BEARING	2	2				
4	90387–26001	COLLAR	1	1				
5	93210–26001	O-RING	1	1				
6	93102–42004	OIL SEAL	1	1				
7	5KM–17402–01	DRIVE AXLE ASSY	1	1				
8	90201–20278	WASHER, PLATE	1	1				
9	93310–420F2	BEARING	1	1				
10	5KM–17453–00	SPROCKET, DRIVEN (25T)	1	1				
11	90201–20278	WASHER, PLATE	1	1				
12	93410–20038	CIRCLIP	1	1				
13	5UG–17582–00	GEAR, MIDDLE DRIVE (21T)	1	1				
14	90387–250R3	COLLAR	1	1				
15	5KM–17223–00	GEAR, HIGH WHEEL (28T)	1	1				
16	90209–22082	WASHER (T=0.5)	2	2				
17	93440–25084	CIRCLIP	2	2				
18	5KM–17285–00	CLUTCH, DOG	1	1				
19	5UG–17233–00	GEAR, LOW WHEEL (35T)	1	1				
20	90201–17255	WASHER, PLATE	1	1				
21	93306–20221	BEARING	1	1				
22	93306–20332	BEARING	1	1				
23	94591–54034	CHAIN (23RH302-34ASM)	1	1				
24	5KM–17523–10	SHAFT	1	1				
25	93440–25084	CIRCLIP	2	2				
26	5UG–17583–00	GEAR, MIDDLE DRIVEN (41T)	1	1				
27	93306–30318	BEARING	1	1				

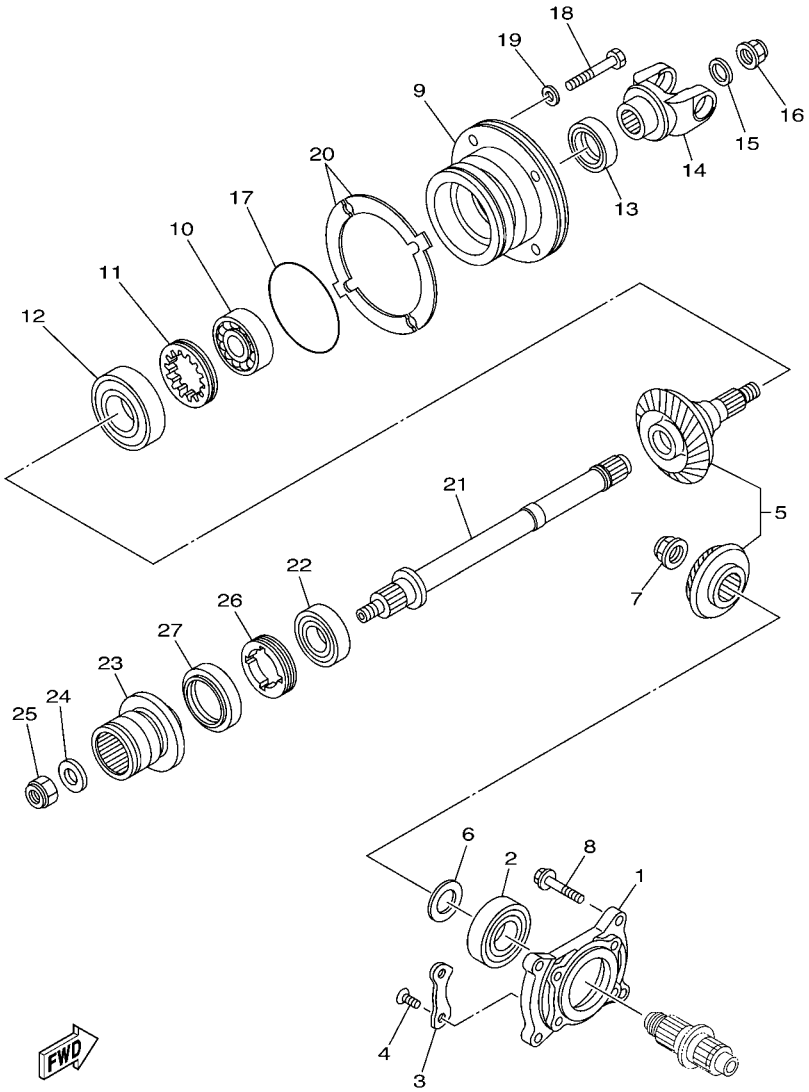

5UG1110-C180

FIG. 18 MIDDLE DRIVE GEAR

REF. NO.	PART NO.	DESCRIPTION	USA	CAN				REMARKS
1	5KM–17521–00	HOUSING, BEARING	1	1				
2	93306–30537	BEARING	1	1				
3	11H–15383–02	PLATE, BEARING COVER	2	2				
4	90149–08152	SCREW	4	4				
5	5KM–Y1754–00	MIDDLE GEAR COMP.	1	1				
6	5KM–17531–00	SHIM, PINION (0.1T)	1	1				UR
	5KM–17531–10	SHIM, PINION (0.15T)	1	1				UR
	5KM–17531–20	SHIM, PINION (0.2T)	1	1				UR
	5KM–17531–30	SHIM, PINION (0.3T)	1	1				UR
	5KM–17531–40	SHIM, PINION (0.4T)	1	1				UR
	5KM–17531–50	SHIM, PINION (0.5T)	1	1				UR
7	90179–22015	NUT	1	1				
8	95817–08030	BOLT, FLANGE	4	4				
9	5KM–17551–10	HOUSING, BEARING	1	1				
10	93306–37206	BEARING	1	1				
11	90179–60001	NUT	1	1				
12	93306–20715	BEARING	1	1				
13	93102–30170	OIL SEAL	1	1				
14	5UG–17556–00	YOKE, JOINT	1	1				
15	90201–170M2	WASHER, PLATE	1	1				
16	90179–16661	NUT	1	1				
17	93210–78544	O-RING	1	1				
18	97027–08030	BOLT	4	4				
19	92907–08600	WASHER, PLATE	4	4				
20	4KB–17531–00	SHIM, PINION (0.10T)	2	2				UR
	4KB–17531–10	SHIM, PINION (0.15T)	2	2				UR
	4KB–17531–20	SHIM, PINION (0.20T)	2	2				UR

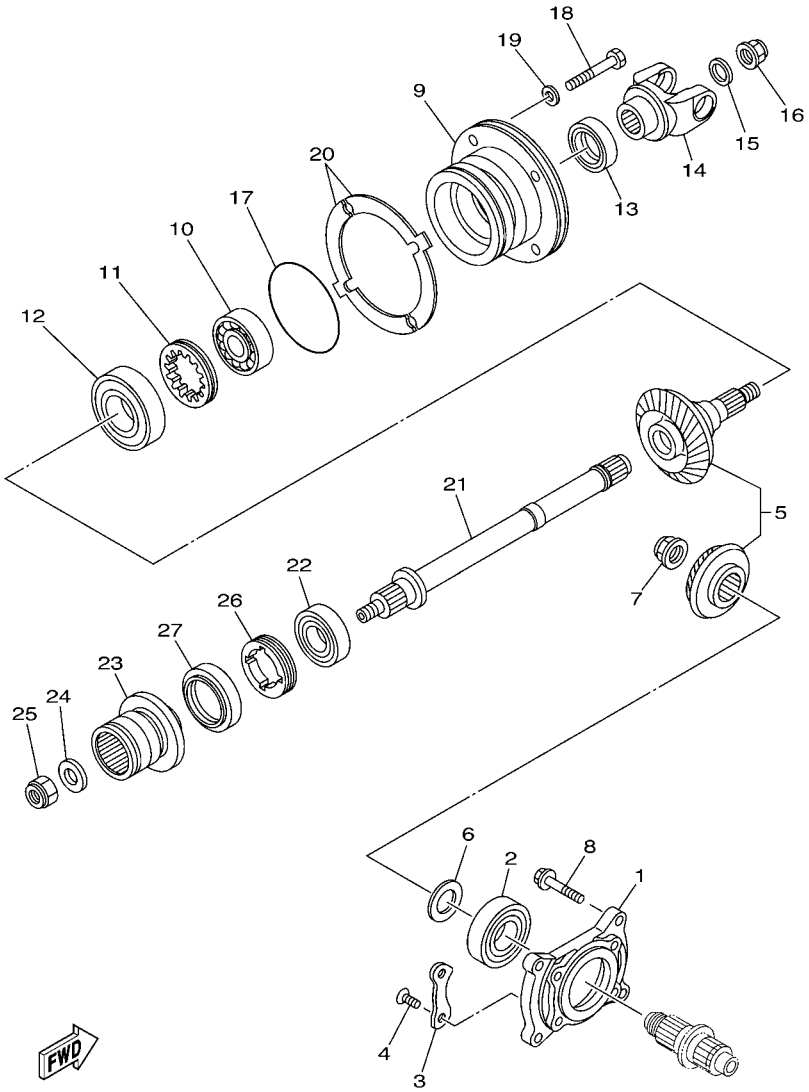

5UG1110-C180

FIG. 18 MIDDLE DRIVE GEAR

REF. NO.	PART NO.	DESCRIPTION	USA	CAN				REMARKS
20	4KB–17531–30	SHIM, PINION (0.30T)	2	2				UR
	4KB–17531–40	SHIM, PINION (0.40T)	2	2				UR
	4KB–17531–50	SHIM, PINION (0.50T)	2	2				UR
	4KB–17531–60	SHIM, PINION (0.60T)	2	2				UR
21	5KM–1761A–10	SHAFT, 1	1	1				
22	93306–20597	BEARING	1	1				
23	5UG–45593–00	FLANGE, COUPLING 1	1	1				
24	90201–14633	WASHER, PLATE	1	1				
25	90185–14070	NUT, SELF-LOCKING	1	1				
26	90179–55660	NUT	1	1				
27	93102–44454	OIL SEAL	1	1				

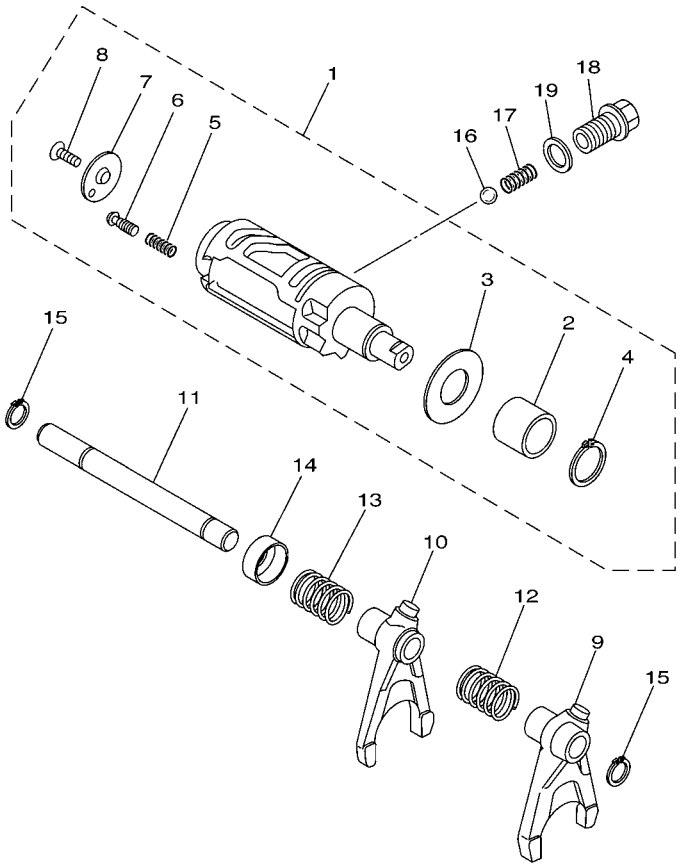

5UG1110-C190

FIG. 19 SHIFT CAM & FORK

REF. NO.	PART NO.	DESCRIPTION	USA	CAN				REMARKS
1	5UG–18540–00	SHIFT CAM ASSY	1	1				
2	90387–2007S	.COLLAR	1	1				
3	90201–20015	.WASHER, PLATE	1	1				
4	93410–20038	.CIRCLIP	1	1				
5	90501–06022	.SPRING, COMPRESSION	1	1				
6	5KM–18542–00	.POINT, NEUTRAL	1	1				
7	4UN–18566–00	.PLATE, SIDE 2	1	1				
8	90149–05321	.SCREW	1	1				
9	5KM–18511–00	FORK, SHIFT 1	1	1				
10	5KM–18512–00	FORK, SHIFT 2	1	1				
11	5KM–18531–01	BAR, SHIFT FORK GUIDE 1	1	1				
12	90501–12016	SPRING, COMPRESSION	1	1				
13	90501–16002	SPRING, COMPRESSION	1	1				
14	5KM–18323–00	CAP, SPRING	1	1				
15	99009–12400	CIRCLIP	2	2				
16	93503–08007	BALL	1	1				
17	90501–10353	SPRING, COMPRESSION	1	1				
18	90105–14367	BOLT, FLANGE	1	1				
19	90430–14194	GASKET	1	1				

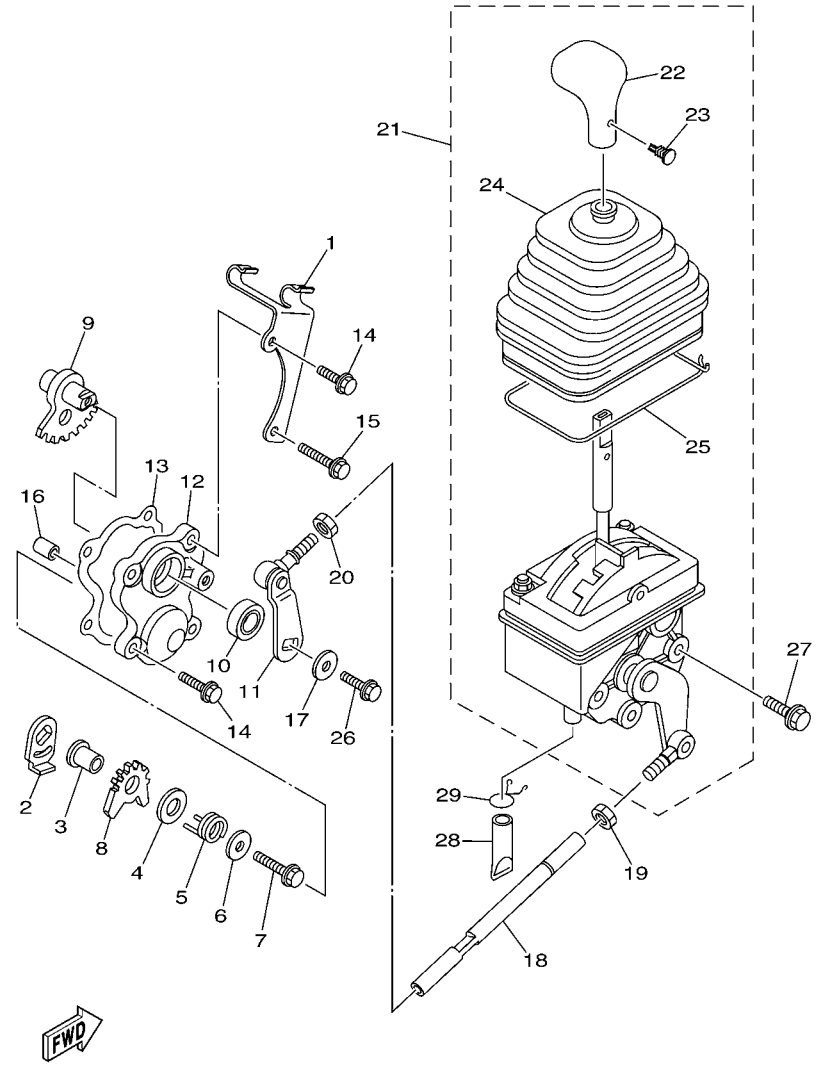

5UG1110-C200

FIG. 20 SHIFT SHAFT

REF. NO.	PART NO.	DESCRIPTION	USA	CAN				REMARKS
1	5UG–13487–00	GUIDE, OIL HOSE	1	1				
2	4SH–18198–00	LEVER	1	1				
3	90387–0613B	COLLAR	1	1				
4	90201–132G5	WASHER, PLATE	1	1				
5	90508–35764	SPRING, TORSION	1	1				
6	90201–06008	WASHER, PLATE	1	1				
7	95817–06035	BOLT, FLANGE	1	1				
8	5KM–18191–00	LEVER	1	1				
9	5KM–18197–00	SHAFT	1	1				
10	93102–15212	OIL SEAL	1	1				
11	5UG–18104–00	SHIFT GUIDE COMP.	1	1				
12	5KM–18129–01	COVER, SHIFT SHAFT	1	1				
13	5KM–18146–00	GASKET	1	1				
14	95027–06020	BOLT, FLANGE	3	3				
15	95027–06030	BOLT, FLANGE	1	1				
16	99530–08012	PIN, DOWEL	1	1				
17	90201–06008	WASHER, PLATE	1	1				
18	5UG–18115–00	ROD, SHIFT	1	1				
19	90170–08358	NUT	1	1				
20	95307–08700	NUT	1	1				
21	5UG–18300–01	SHIFTER ASSY	1	1				
22	5UG–18174–00	.KNOB, SHIFT LEVER	1	1				
23	90269–05055	.RIVET	1	1				
24	5GH–18131–00	.BOOT, SEALING	1	1				
25	5GH–18617–00	.STOPPER,RUBBER	1	1				
26	95817–06016	BOLT, FLANGE	1	1				
27	95807–08012	BOLT, FLANGE	3	3				

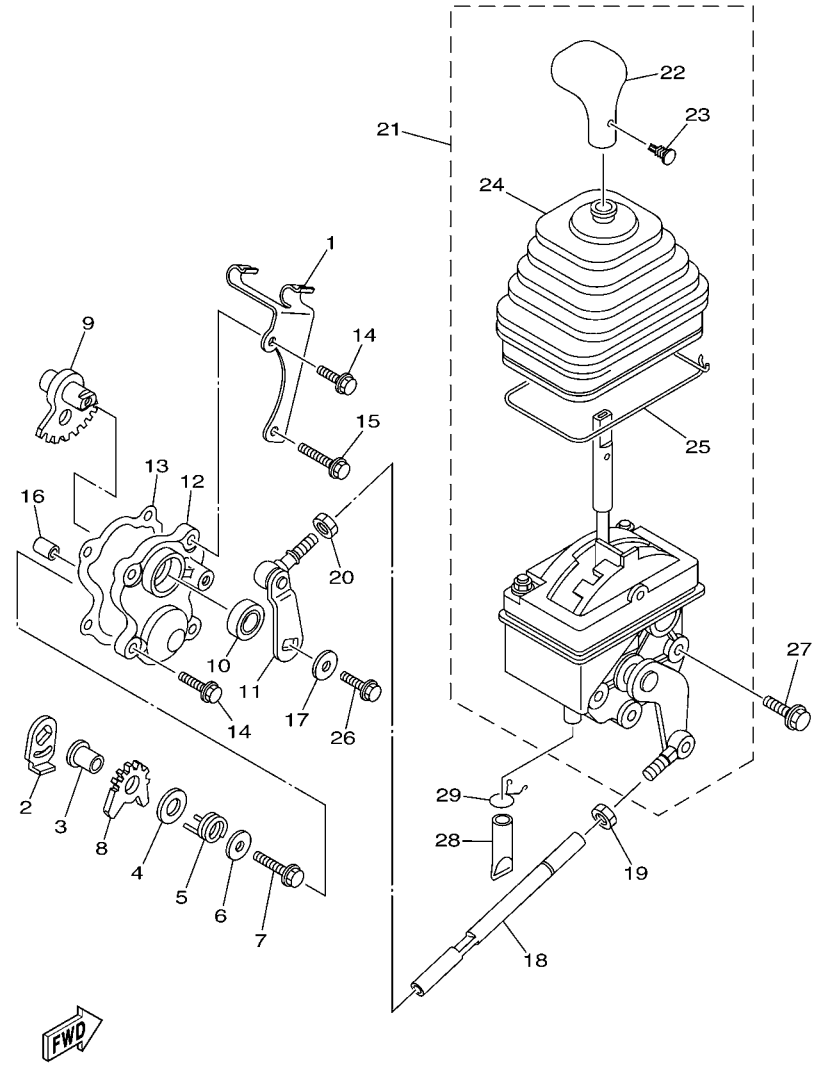

5UG1110-C200

FIG. 20 SHIFT SHAFT

REF. NO.	PART NO.	DESCRIPTION	USA	CAN				REMARKS
28	4GY–1443E–00	PIPE, DRAIN	1	1				
29	90467–15012	CLIP	1	1				

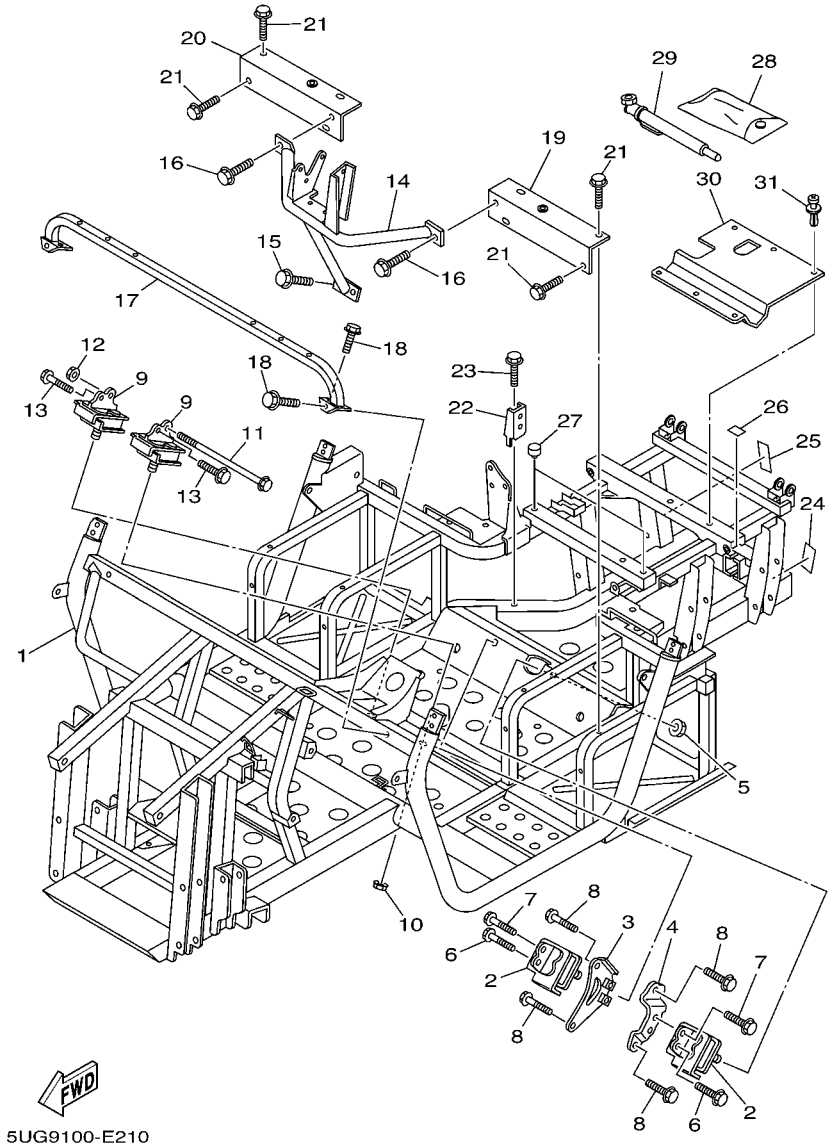

FIG. 21 FRAME

REF. NO.	PART NO.	DESCRIPTION	USA	CAN				REMARKS
1	5UG–F1110–30	FRAME COMP.	1	1				WITH DOOR->FIG.53
2	5UG–21485–00	DAMPER, RUBBER 1	2	2				
3	5KM–21315–00	STAY, ENGINE 2	1	1				
4	5KM–21316–00	STAY, ENGINE 3	1	1				
5	9560P–10200	NUT, FLANGE	2	2				
6	95027–06016	BOLT, FLANGE	2	2				
7	95817–08016	BOLT, FLANGE	2	2				
8	95817–08020	BOLT, FLANGE	4	4				
9	5UG–21486–00	DAMPER 2	2	2				
10	9560P–10200	NUT, FLANGE	2	2				
11	90105–10300	BOLT, FLANGE	1	1				
12	9560P–10200	NUT, FLANGE	1	1				
13	95027–06016	BOLT, FLANGE	2	2				
14	5UG–F1986–00	REINFORCEMENT, FRAME 1	1	1				
15	90105–06831	BOLT, FLANGE	2	2				
16	95817–10020	BOLT, FLANGE	2	2				
17	2P5–F1145–00	SUPPORTER	1	1				
18	90105–08867	BOLT, FLANGE	4	4				
19	5UG–F114H–00	SUPPORT, SEAT	1	1				
20	5UG–F114J–00	SUPPORT, SEAT	1	1				
21	90105–08867	BOLT, FLANGE	8	8				
22	5UG–F116B–00	BRACKET	1	1				
23	90105–06831	BOLT, FLANGE	1	1				
24	5UG–F151K–02	LABEL 7	1	1				ENGLISH
25	5UG–F151K–11	LABEL 7		1				FRENCH
26	5UG–F151J–00	LABEL 6	1	1				
27	5UG–F7114–00	STOPPER, MAIN STAND	2	2				

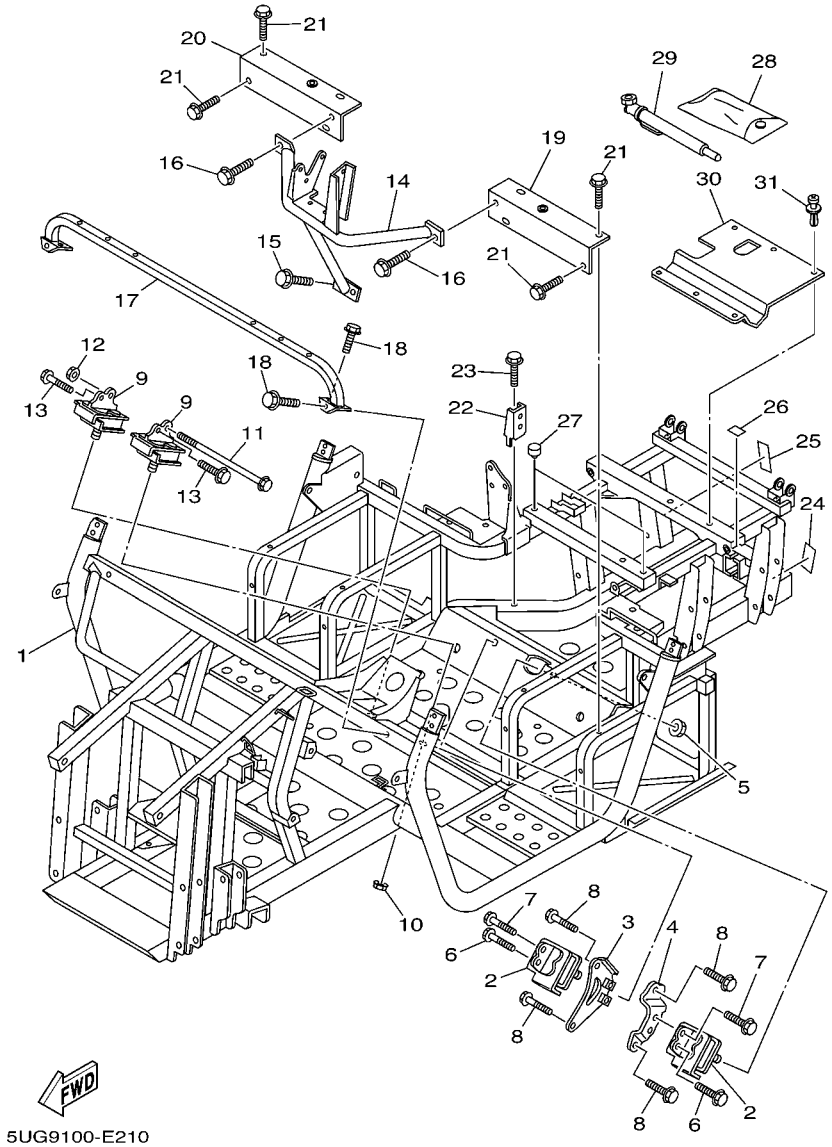

FIG. 21 FRAME

REF. NO.	PART NO.	DESCRIPTION	USA	CAN				REMARKS
28	5ND–F8100–00	TOOL KIT	1	1				
29	5UG–F811A–00	GAUGE, AIR	1	1				
30	5UG–F2898–00	INSULATOR, HEAT	1	1				
31	90269–06804	RIVET	6	6				

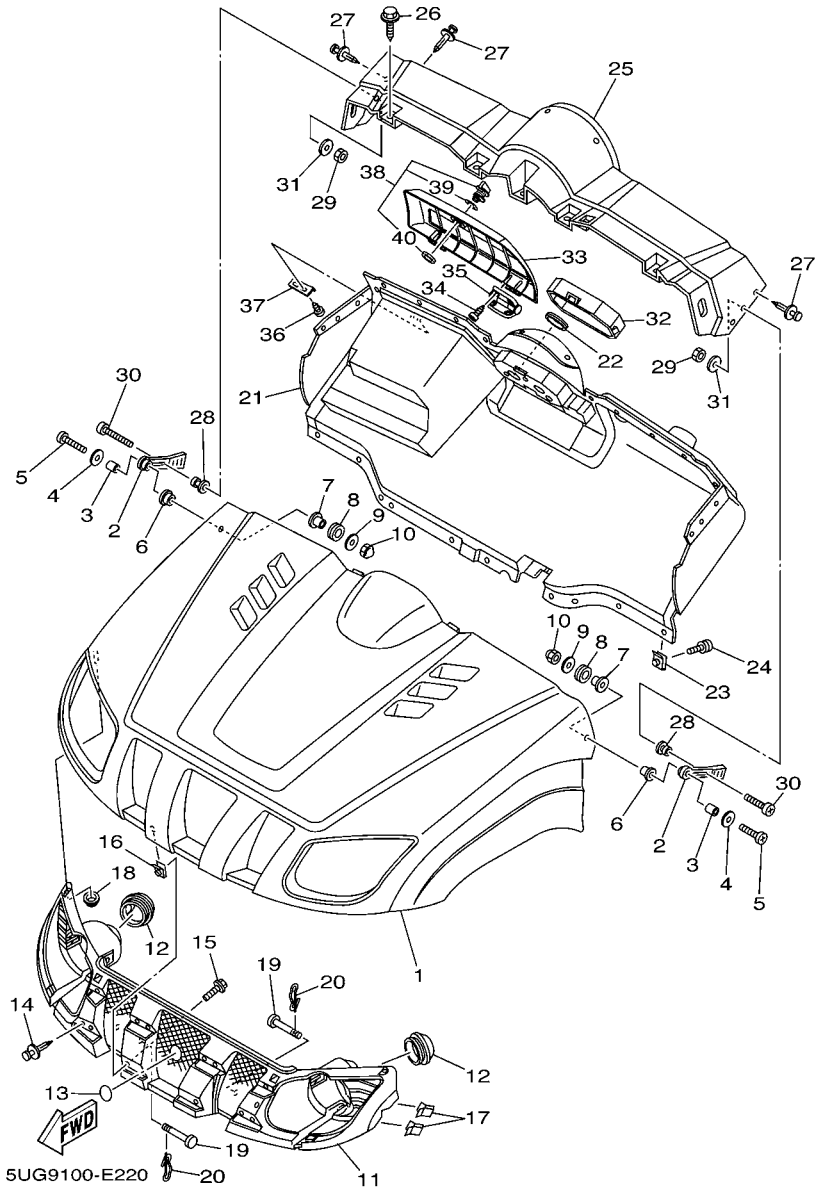

FIG. 22 FRONT FENDER

REF. NO.	PART NO.	DESCRIPTION	USA	CAN				REMARKS
1	5UG–F1511–10	FENDER, FRONT	1	1				
2	8V0–77171–00	BODY, LATCH 1	2	2				
3	90387–06241	COLLAR	2	2				
4	90201–06557	WASHER, PLATE	2	2				
5	98907–06035	SCREW, BIND	2	2				
6	90387–062M9	COLLAR	2	2				
7	90387–077M3	COLLAR	2	2				
8	90480–15235	GROMMET	2	2				
9	90201–06557	WASHER, PLATE	2	2				
10	95307–06800	NUT	2	2				
11	5UG–F8309–01	GRILLE, FRONT	1	1				
12	5GH–28349–00	CAP	2	2				
13	5FU–F175B–01	TUNING FORK MARK	1	1				
14	90269–06804	RIVET	8	8				
15	90119–05001	BOLT, WITH WASHER	4	4				
16	90183–050A0	NUT, SPRING	4	4				
17	5UG–F3447–00	CLIP	4	4				
18	90183–08800	NUT, SPRING	2	2				
19	90240–13800	PIN, CLEVIS	2	2				
20	90468–16191	CLIP	2	2				
21	5UG–F3391–02	PANEL, FRONT	1	1				
22	90480–40047	GROMMET	1					
23	90183–05073	NUT, SPRING	8	8				
24	90119–05001	BOLT, WITH WASHER	8	8				
25	5UG–F3397–00	PANEL, FRONT 2	1	1				
26	90119–06868	BOLT, WITH WASHER	4	4				
27	90269–06800	RIVET	16	16				

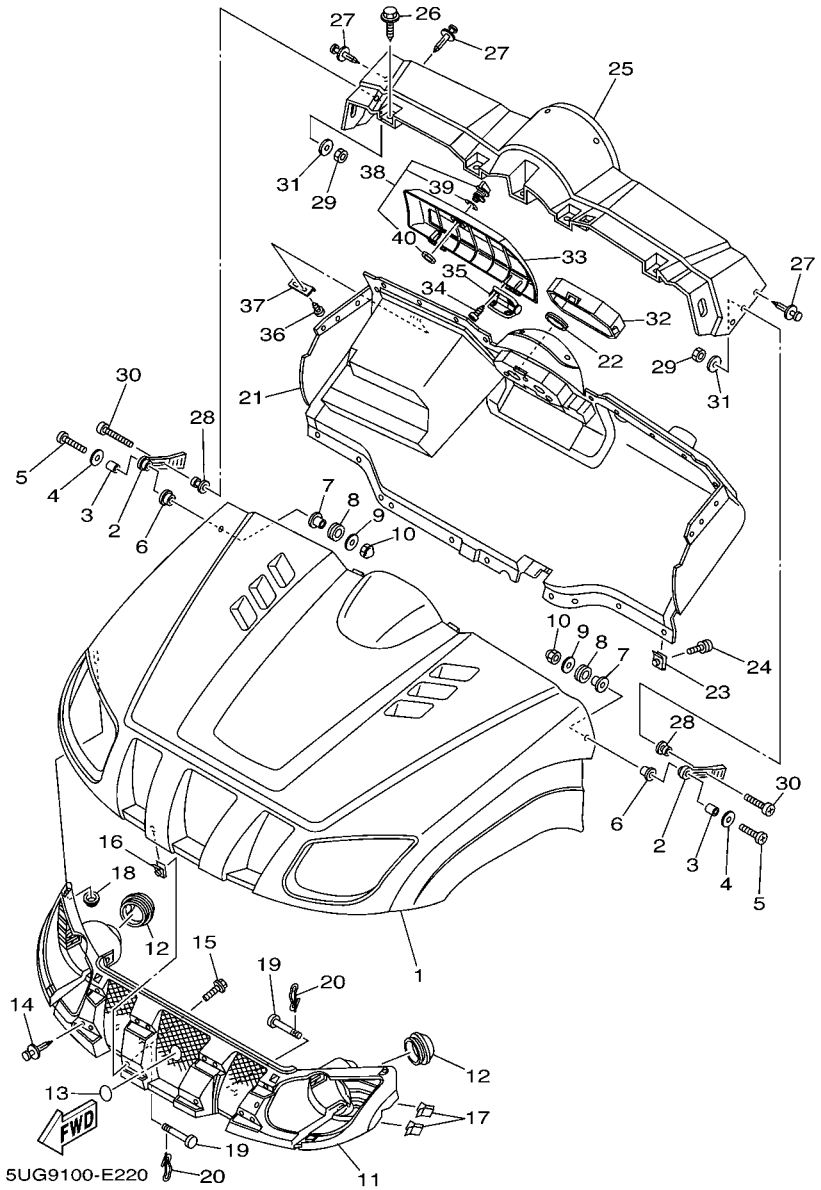

FIG. 22 FRONT FENDER

REF. NO.	PART NO.	DESCRIPTION	USA	CAN				REMARKS
28	8M6–77175–00	HOLDER, LATCH	2	2				
29	95707–06300	NUT, FLANGE	2	2				
30	98907–06035	SCREW, BIND	2	2				
31	90201–06074	WASHER, PLATE	2	2				
32	5UG–F837L–00	PANEL, CONSOLE 1	1					
33	5UG–K7736–00	LID, GLOVE BOX	1	1				
34	90164–04800	SCREW, TAPPING	8	8				
35	5UG–F1797–00	HINGE	2	2				
36	90164–05800	SCREW, TAPPING	2	2				
37	5UG–F139T–00	BRACKET, COVER	1	1				
38	5UG–F1780–00	LOCK ASSY	1	1				
39	5UG–F3139–00	.GASKET	1	1				
40	5UG–F1494–00	.NUT	1	1				

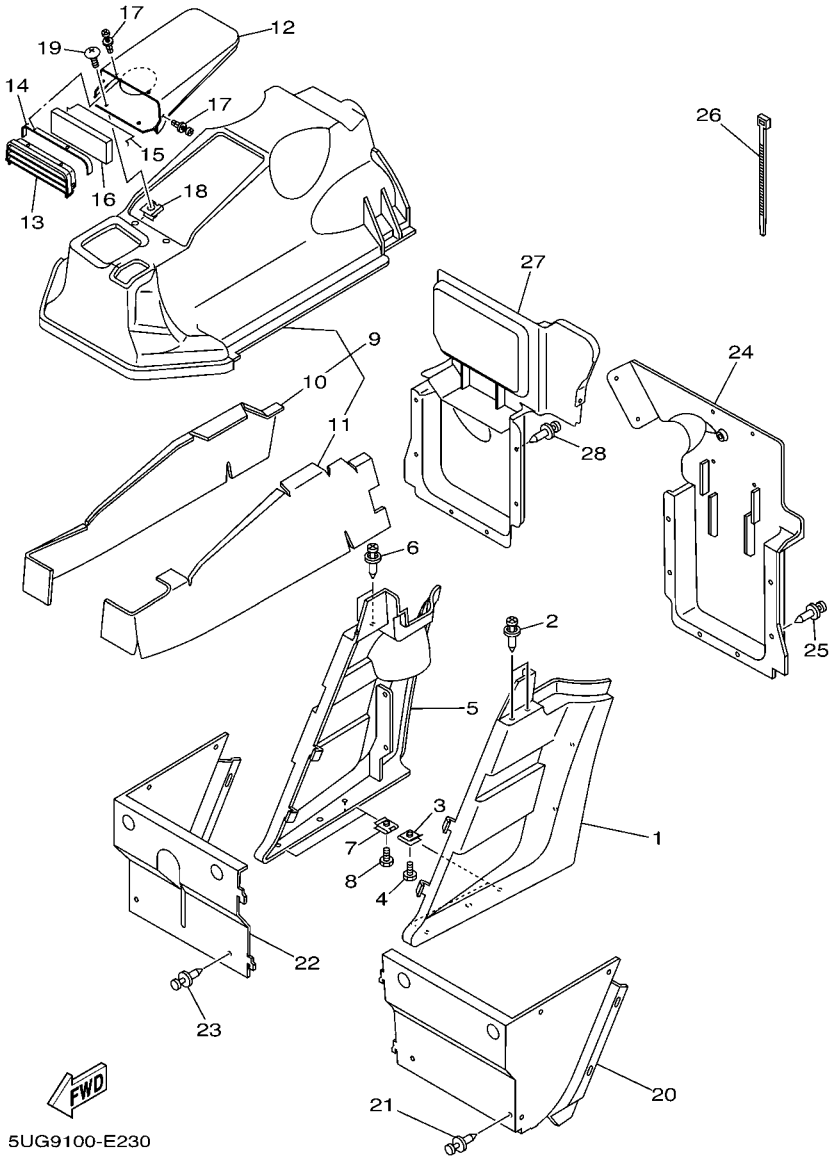

FIG. 23 SIDE COVER

REF. NO.	PART NO.	DESCRIPTION	USA	CAN				REMARKS
1	5UG–K810F–01	SIDE PANEL COMP.(L.H)	1	1				
2	90269–06800	RIVET	2	2				
3	90183–05008	NUT, SPRING	2	2				
4	90119–05001	BOLT, WITH WASHER	2	2				
5	5UG–K810G–01	SIDE PANEL COMP.(R.H)	1	1				
6	90269–06800	RIVET	2	2				
7	90183–05008	NUT, SPRING	2	2				
8	90119–05001	BOLT, WITH WASHER	2	2				
9	2P5–F8108–00	COVER ASSY	1	1				
10	5UG–F2873–10	.SEAL 1	1	1				
11	5UG–F2875–10	.SEAL 3	1	1				
12	5UG–2177A–00	BOX	1	1				
13	5UG–28229–00	COVER 2	1	1				
14	5UG–14457–00	SEAL	1	1				
15	5UG–14415–00	HOLDER, WIRE	1	1				
16	5UG–14476–00	SEAL	1	1				
17	90269–05001	RIVET	4	4				
18	90183–05008	NUT, SPRING	2	2				
19	90154–05005	SCREW, BINDING	2	2				
20	5UG–F254J–00	SUPPORT, SIDE PANEL	1	1				WITH DOOR->FIG.53
21	90269–06800	RIVET	7	7				
22	5UG–F254K–00	SUPPORT, SIDE PANEL 2	1	1				WITH DOOR->FIG.53
23	90269–06800	RIVET	7	7				
24	5UG–K7561–01	PROTECTOR, SIDE	1	1				
25	90269–06800	RIVET	6	6				
26	90464–48800	CLAMP	2	2				
27	5UG–F4141–01	PROTECTOR, FUEL TANK	1	1				

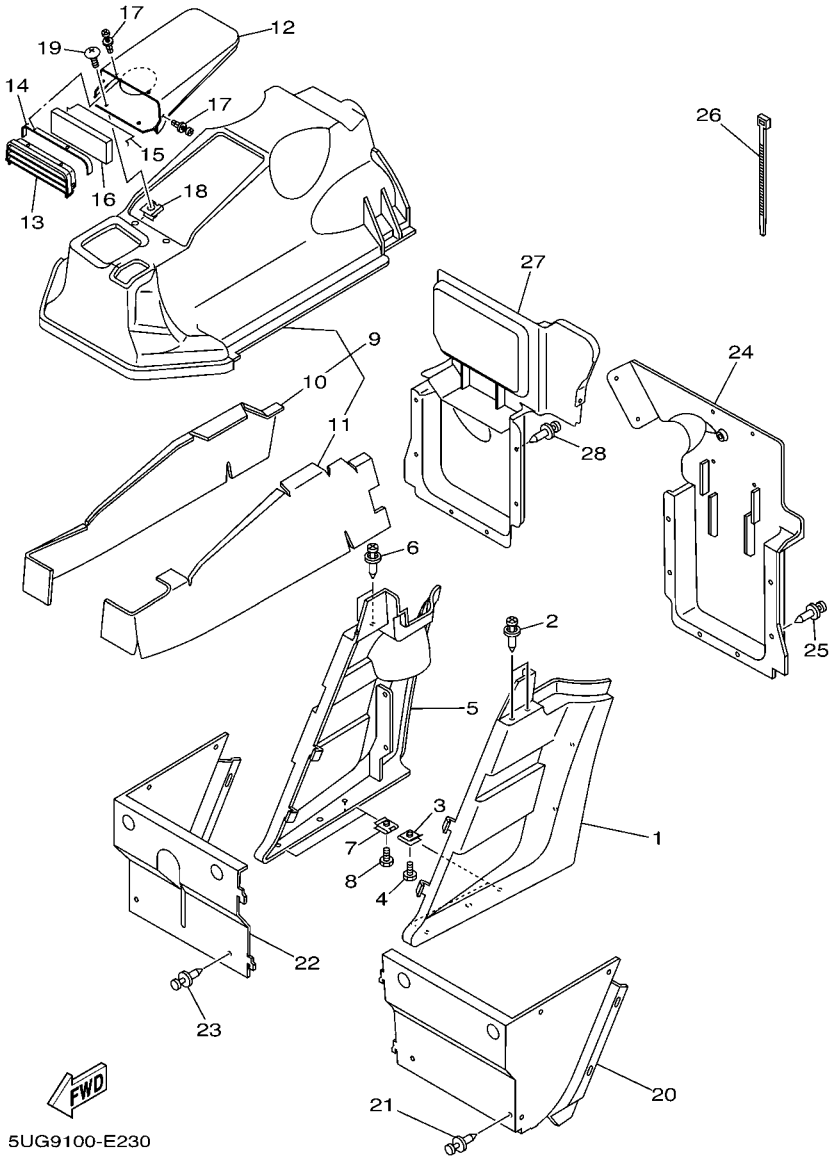

FIG. 23 SIDE COVER

REF. NO.	PART NO.	DESCRIPTION	USA	CAN				REMARKS
28	90269–06800	RIVET	7	7				

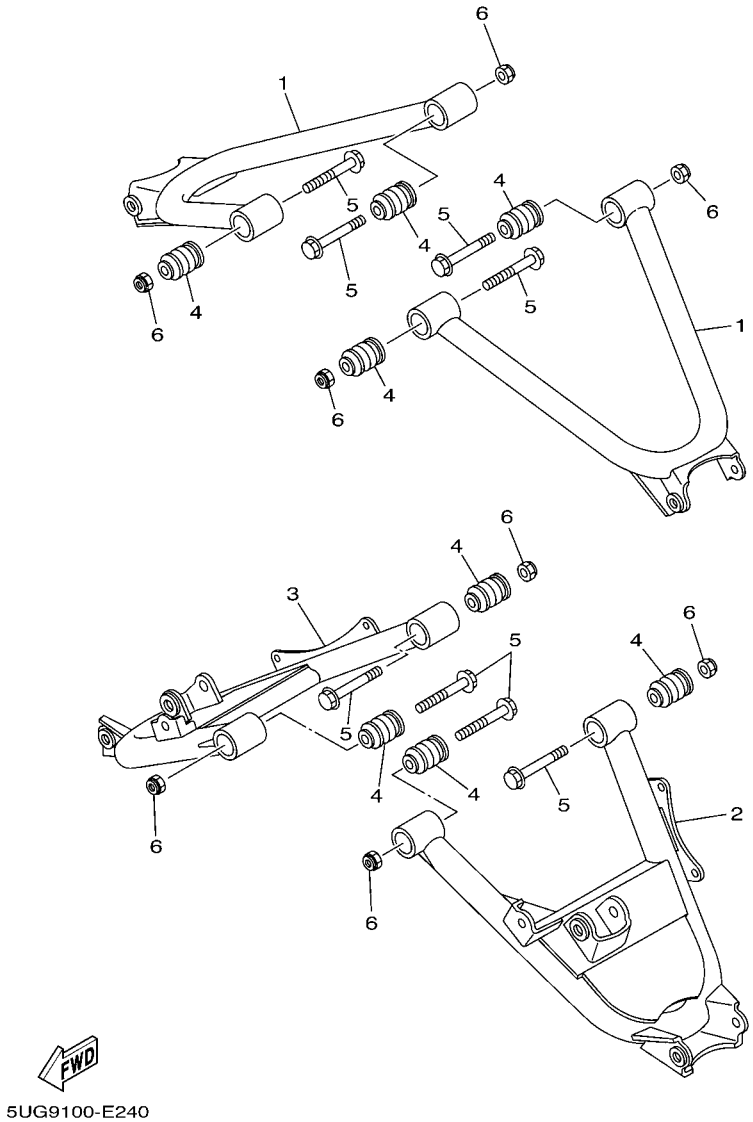

FIG. 24 REAR ARM

REF. NO.	PART NO.	DESCRIPTION	USA	CAN				REMARKS
1	5UG–F2171–00	ARM, REAR 1	2	2				
2	5UG–F217M–10	ARM 1	1	1				
3	5UG–F217N–10	ARM 2	1	1				
4	5KM–23526–00	BUSH	8	8				
5	90105–10253	BOLT, FLANGE	8	8				
6	90185–10060	NUT, SELF-LOCKING	8	8				

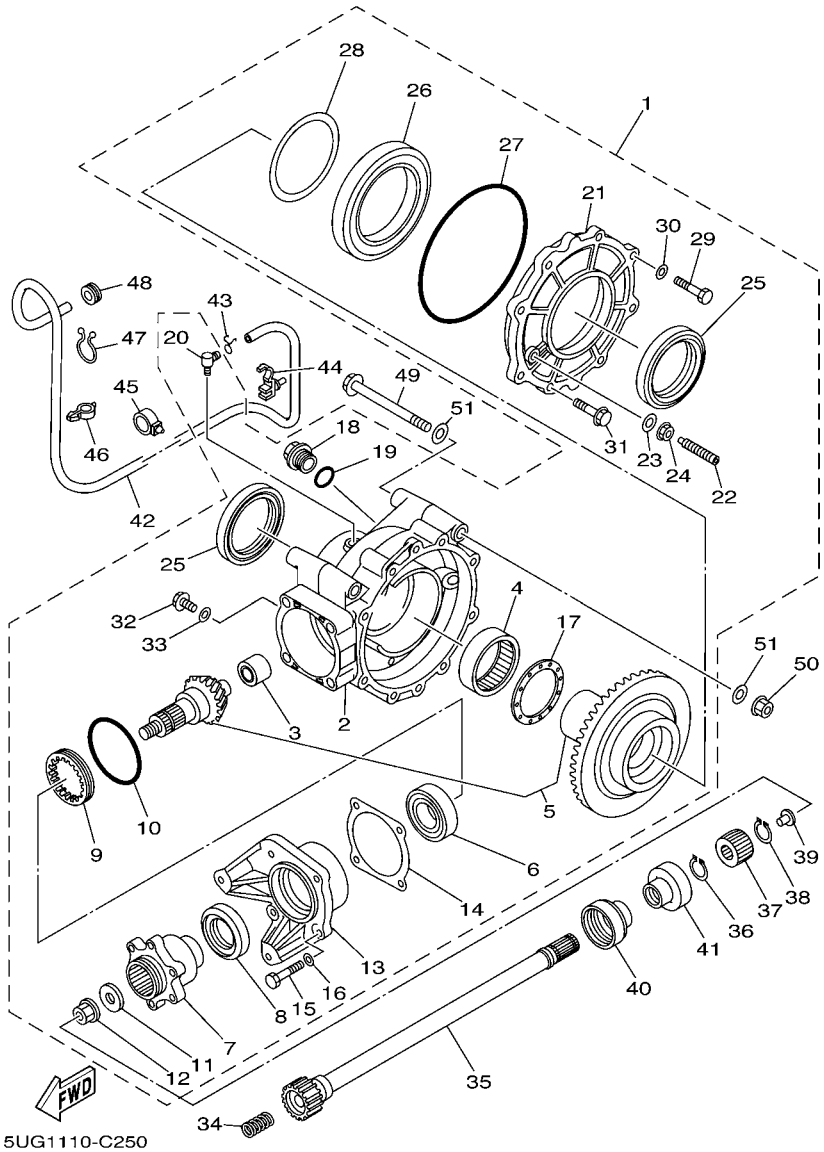

FIG. 25 DRIVE SHAFT

REF. NO.	PART NO.	DESCRIPTION	USA	CAN				REMARKS
1	5UG–46101–01	REAR AXLE GEAR CASE ASSY	1	1				
2	5UG–46151–01	.HOUSING, DRIVE SHAFT	1	1				
3	5KM–46102–00	.BEARING ASSY	1	1				
4	93317–85569	.BEARING	1	1				
5	5UG–Y4612–00	.RING GEAR SET	1	1				
6	93306–30574	.BEARING	1	1				
7	5UG–46212–00	.BOSS, 1	1	1				
8	93102–35009	.OIL SEAL	1	1				
9	90179–65305	.NUT	1	1				
10	93210–626A7	.O-RING	1	1				
11	90201–12191	.WASHER, PLATE	1	1				
12	90179–12325	.NUT	1	1				
13	5UG–46144–00	.HOUSING, PINION BEARING	1	1				
14	2HR–46127–00–25	.SHIM, DRIVE PISTON (0.25T)	1	1				UR
	2HR–46127–00–30	.SHIM, DRIVE PISTON (0.30T)	1	1				UR
	2HR–46127–00–35	.SHIM, DRIVE PISTON (0.35T)	1	1				UR
	2HR–46127–00–40	.SHIM, DRIVE PISTON (0.40T)	1	1				UR
	2HR–46127–00–45	.SHIM, DRIVE PISTON (0.45T)	1	1				UR
	2HR–46127–00–50	.SHIM, DRIVE PISTON (0.50T)	1	1				UR
15	97017–08035	.BOLT	4	4				
16	92907–08600	.WASHER, PLATE	4	4				
17	24W–46118–00–12	.WASHER, THRUST (1.2T)	1	1				UR
	24W–46118–00–14	.WASHER, THRUST (1.4T)	1	1				UR
	24W–46118–00–16	.WASHER, THRUST (1.6T)	1	1				UR
	24W–46118–00–18	.WASHER, THRUST (1.8T)	1	1				UR
	24W–46118–00–20	.WASHER, THRUST (2.0T)	1	1				UR
18	90340–20143	.PLUG, STRAIGHT SCREW	1	1				

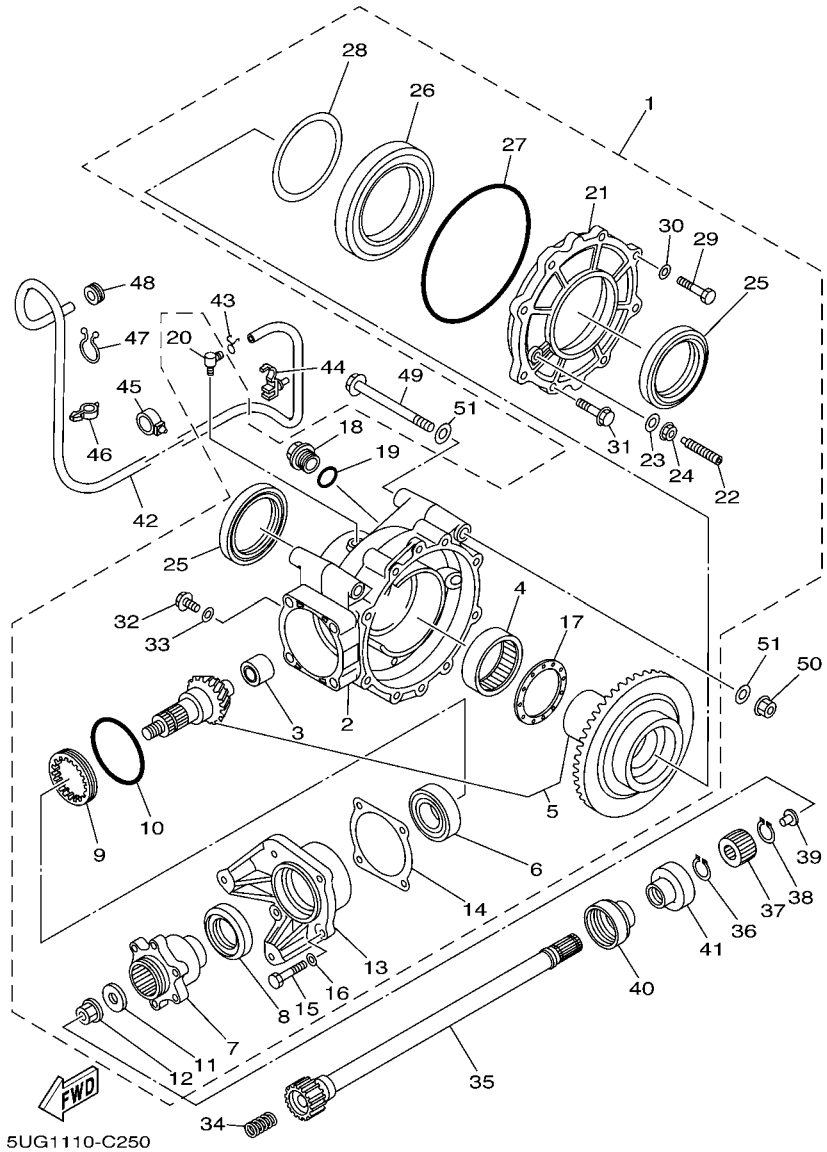

FIG. 25 DRIVE SHAFT

REF. NO.	PART NO.	DESCRIPTION	USA	CAN				REMARKS
19	93210–19123	.O-RING	1	1				
20	5UG–15371–00	.BREATHER	1	1				
21	5KM–46152–00	.HOUSING, BEARING	1	1				
22	2HR–46156–00	.STOPPER, RING GEAR	1	1				
23	90201–08087	.WASHER, PLATE	1	1				
24	95707–08500	.NUT, FLANGE	1	1				
25	93102–65008	.OIL SEAL	2	2				
26	93316–01701	.BEARING	1	1				
27	93211–51749	.O-RING	1	1				
28	22U–46117–00–25	.SHIM, RING GEAR (0.25T)	1	1				UR
	22U–46117–00–30	.SHIM, RING GEAR (0.30T)	1	1				UR
	22U–46117–00–40	.SHIM, RING GEAR (0.40T)	1	1				UR
29	97027–08025	.BOLT	6	6				
30	92907–08600	.WASHER, PLATE	6	6				
31	95817–10025	.BOLT, FLANGE	2	2				
32	95027–10016	.BOLT, FLANGE	1	1				
33	90430–10171	.GASKET	1	1				
34	90501–200A0	SPRING, COMPRESSION	1	1				
35	5UG–G6172–00	SHAFT, DRIVE	1	1				
36	99009–19400	CIRCLIP	1	1				
37	5KM–46126–00	COUPLING	1	1				
38	93410–22039	CIRCLIP	1	1				
39	5KM–46559–00	DAMPER	1	1				
40	5KM–46137–00	SEAL 2	1	1				
41	5KM–46136–00	SEAL 1	1	1				
42	90445–074F6	HOSE (L1300)	1	1				
43	90467–07029	CLIP	1	1				

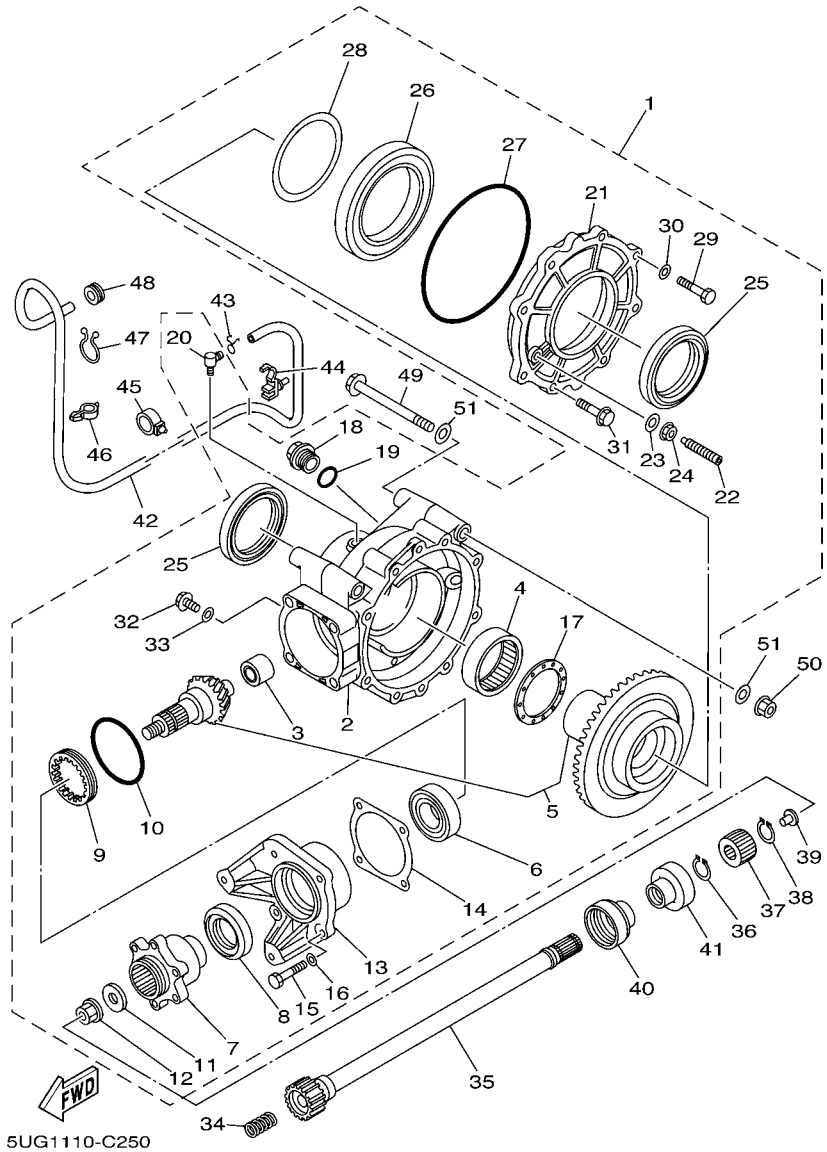

FIG. 25 DRIVE SHAFT

REF. NO.	PART NO.	DESCRIPTION	USA	CAN				REMARKS
44	90464–12830	CLAMP	3	3				
45	90464–19815	CLAMP	2	2				
46	90464–10833	CLAMP	2	2				
47	90464–20804	CLAMP	1	1				
48	90480–10517	GROMMET	1	1				
49	90105–10111	BOLT, FLANGE	2	2				
50	95607–10200	NUT, U FLANGE	2	2				
51	90201–101J1	WASHER, PLATE	4	4				

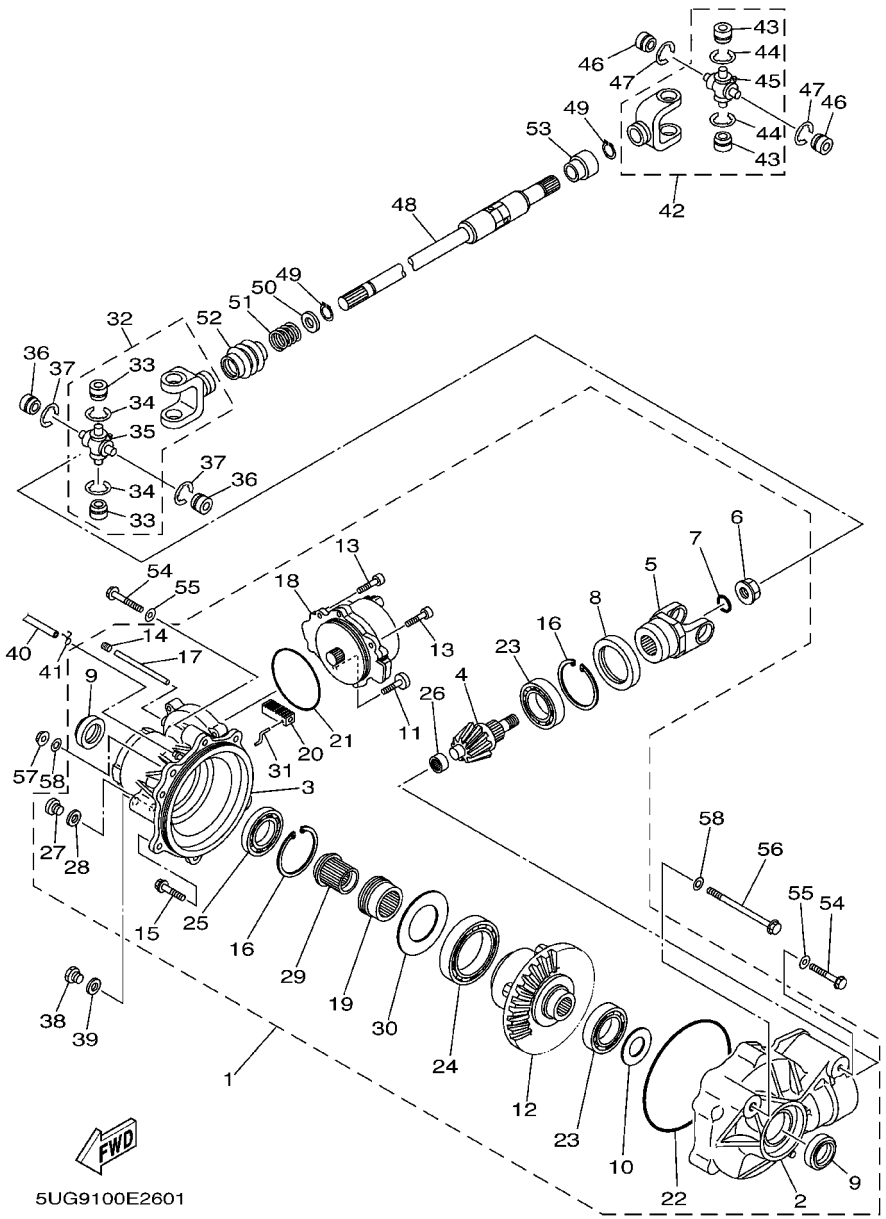

FIG. 26 FRONT DIFFERENTIAL

REF. NO.	PART NO.	DESCRIPTION	USA	CAN				REMARKS
1	5UG–46160–10	FRONT AXLE GEAR CASE COMP.	1	1				
2	5UG–46161–00	.HOUSING, SHAFT DRIVE 2	1	1				
3	5UG–46162–00	.HOUSING, BEARING 2	1	1				
4	5KM–46141–11	.PINION, DRIVE 2	1	1				
5	5KM–46146–10	.YOKE, JOINT 2	1	1				
6	4WV–46145–10	.NUT 1	1	1				
7	93210–14359	.O-RING	1	1				
8	93102–48012	.OIL SEAL	1	1				
9	93102–24034	.OIL SEAL	2	2				
10	4WV–46119–01	.SHIM, THRUST (0.1T)	1	1				UR
	4WV–46119–11	.SHIM, THRUST (0.2T)	1	1				UR
	4WV–46119–21	.SHIM, THRUST (0.3T)	1	1				UR
	4WV–46119–31	.SHIM, THRUST (0.4T)	1	1				UR
	4WV–46119–41	.SHIM, THRUST (0.5T)	1	1				UR
	4WV–46119–51	.SHIM, THRUST (1.0T)	1	1				UR
11	5KM–46155–00	.BOLT 1	1	1				
12	5KM–46470–12	.LIMITED SLIP DIFF. ASSY	1	1				
13	91317–08020	.BOLT	2	2				
14	90113–08004	.BOLT, SET	1	1				
15	4WV–46159–00	.BOLT 3	6	6				
16	5KM–46143–00	.RING,HOLE SNAP 2	2	2				
17	5KM–42752–00	.SHAFT	1	1				
18	5KM–4616A–02	.SERVO MOTOR COMP	1	1				
19	5KM–46441–00	.CLUTCH,DRIVEN	1	1				
20	5KM–18319–00	.SHAFT 2	1	1				
21	93210–82001	.O-RING	1	1				
22	93211–40040	.O-RING	1	1				

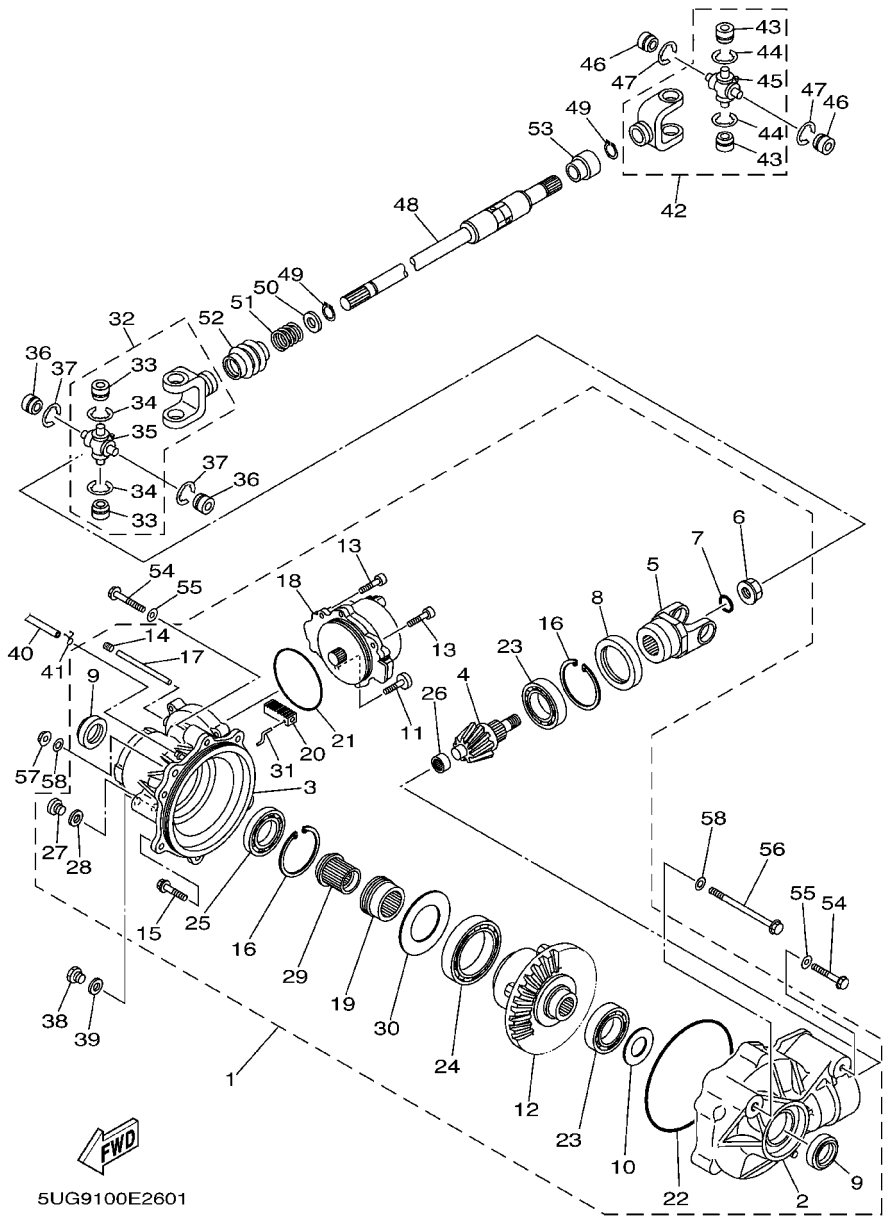

FIG. 26 FRONT DIFFERENTIAL

REF. NO.	PART NO.	DESCRIPTION	USA	CAN				REMARKS
23	93306–00709	.BEARING	2	2				
24	93306–91201	.BEARING	1	1				
25	93316–00702	.BEARING	1	1				
26	4WV–46167–00	.BEARING 4	1	1				
27	90340–10001	.PLUG, STRAIGHT SCREW	1	1				
28	90430–10003	.GASKET	1	1				
29	5KM–46451–00	.ADAPTER	1	1				
30	5KM–46119–01	.SHIM, THRUST (0.1T)	1	1				UR
	5KM–46119–11	.SHIM, THRUST (0.2T)	1	1				UR
	5KM–46119–21	.SHIM, THRUST (0.3T)	1	1				UR
	5KM–46119–31	.SHIM, THRUST (0.4T)	1	1				UR
	5KM–46119–41	.SHIM, THRUST (0.5T)	1	1				UR
	5KM–46119–51	.SHIM, THRUST (1.0T)	1	1				UR
	5KM–46119–61	.SHIM, THRUST (1.5T)	1	1				UR
31	5KM–18514–00	.FORK, SHIFT 4	1	1				
32	5KM–46107–00	CROSS JOINT COMP. 2	1	1				
33	93399–99948	.BEARING	2	2				
34	93440–20088	.CIRCLIP	2	2				
35	5GT–46187–00	.SPIDER	1	1				
36	93399–99948	BEARING	2	2				
37	93440–20088	CIRCLIP	2	2				
38	90340–14029	PLUG, STRAIGHT SCREW	1	1				
39	214–11198–01	GASKET	1	1				
40	90445–070G6	HOSE (L1700)	1	1				
41	90467–07029	CLIP	1	1				
42	5KM–46107–00	CROSS JOINT COMP. 2	1	1				
43	93399–99948	.BEARING	2	2				

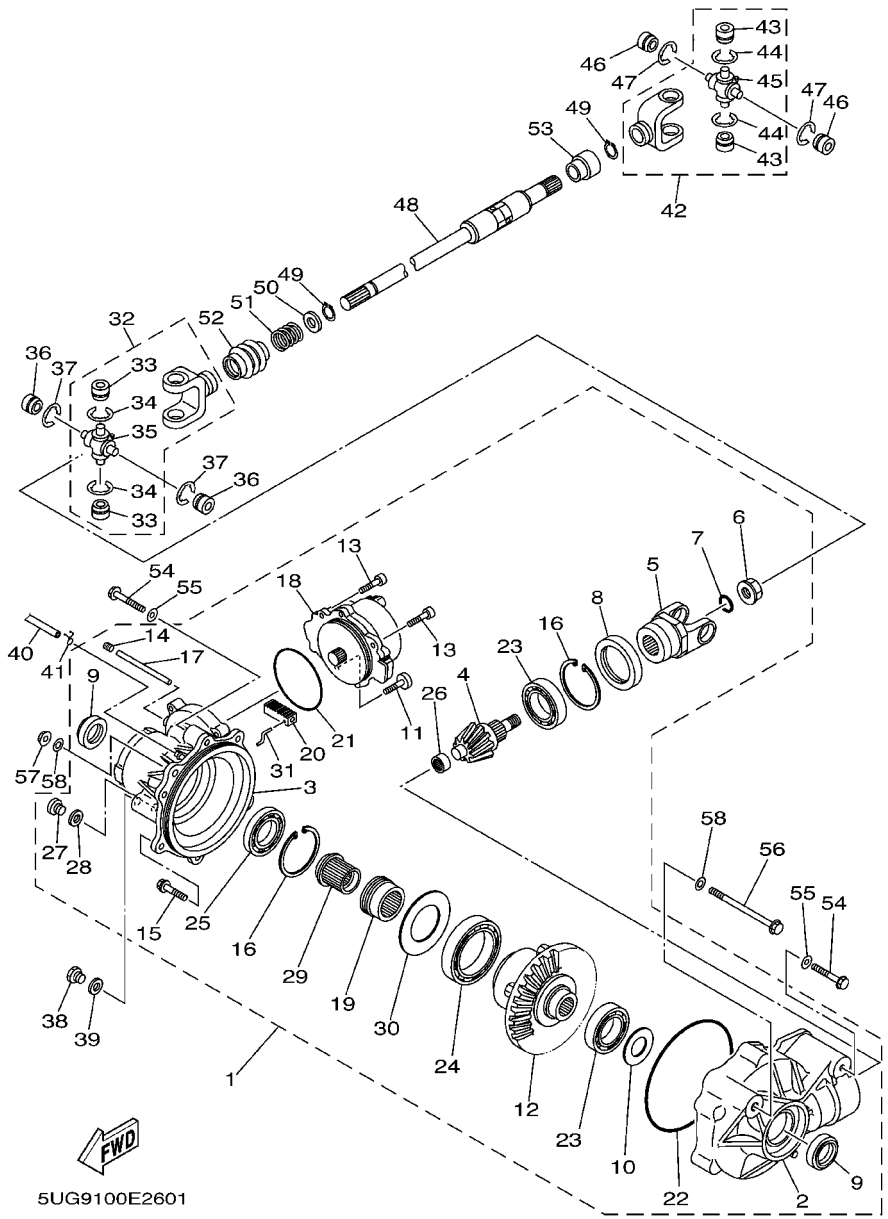

FIG. 26 FRONT DIFFERENTIAL

REF. NO.	PART NO.	DESCRIPTION	USA	CAN				REMARKS
44	93440–20088	.CIRCLIP	2	2				
45	5GT–46187–00	.SPIDER	1	1				
46	93399–99948	BEARING	2	2				
47	93440–20088	CIRCLIP	2	2				
48	5UG–46173–00	SHAFT, DRIVE 2	1	1				
49	99009–19400	CIRCLIP	2	2				
50	90201–20266	WASHER, PLATE (T=1.0)	1	1				
51	90501–235L9	SPRING, COMPRESSION	1	1				
52	5GT–46136–00	SEAL 1	1	1				
53	5GT–46137–00	SEAL 2	1	1				
54	95817–10030	BOLT, FLANGE	2	2				
55	90201–101J1	WASHER, PLATE	2	2				
56	90105–10N51	BOLT, FLANGE	1	1				
57	95607–10200	NUT, U FLANGE	1	1				
58	90201–101J1	WASHER, PLATE	2	2				

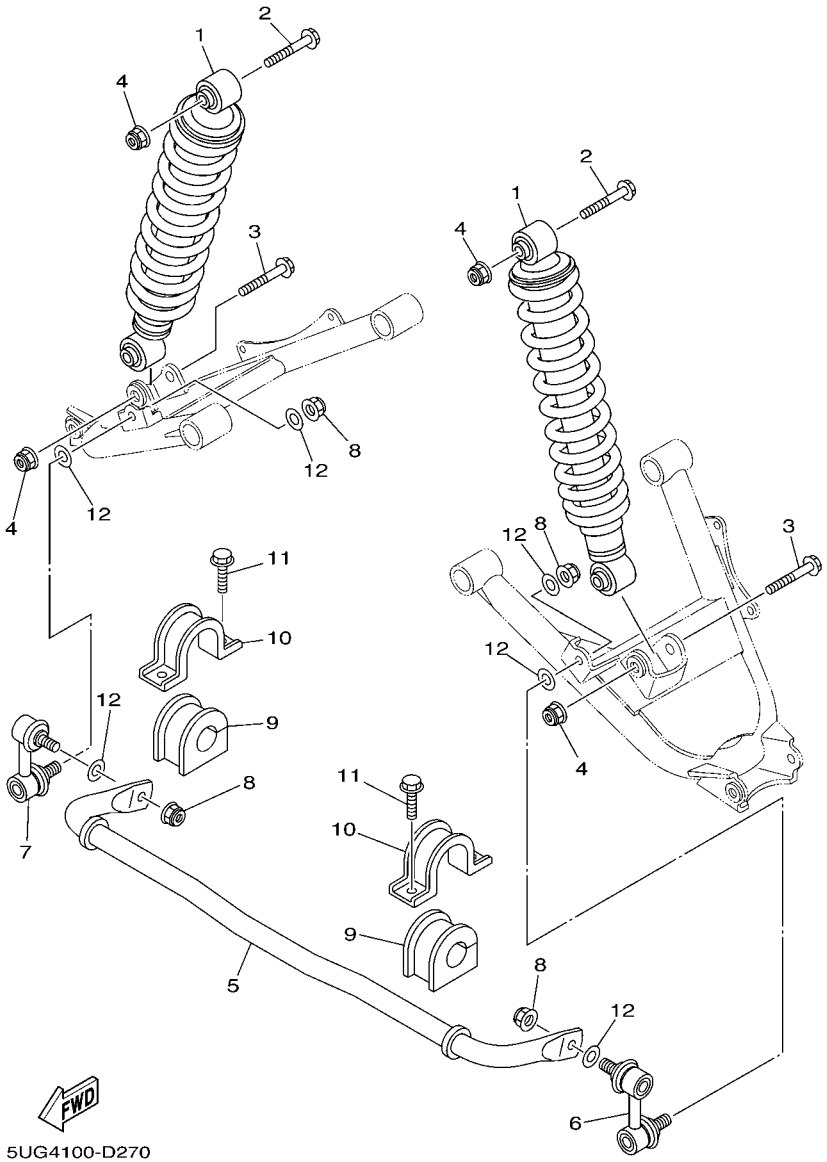

FIG. 27 REAR SUSPENSION

REF. NO.	PART NO.	DESCRIPTION	USA	CAN				REMARKS
1	5UG–F2210–10	SHOCK ABSORBER ASSY, REAR	2	2				
2	90105–12037	BOLT, FLANGE	2	2				
3	90105–12036	BOLT, FLANGE	2	2				
4	90185–12072	NUT, SELF-LOCKING	4	4				
5	5UG–G7491–00	BAR, STABILIZER	1	1				
6	5KM–2385L–01	JOINT, STABILIZER 1	1	1				
7	5KM–2385M–01	JOINT, STABILIZER 2	1	1				
8	95607–10200	NUT, U FLANGE	4	4				
9	5UG–F386G–00	BUSH, STABILIZER FRONT	2	2				
10	5UG–F386H–00	COVER, STABILIZER FRONT	2	2				
11	95817–08014	BOLT, FLANGE	4	4				
12	90201–101J1	WASHER, PLATE	6	6				

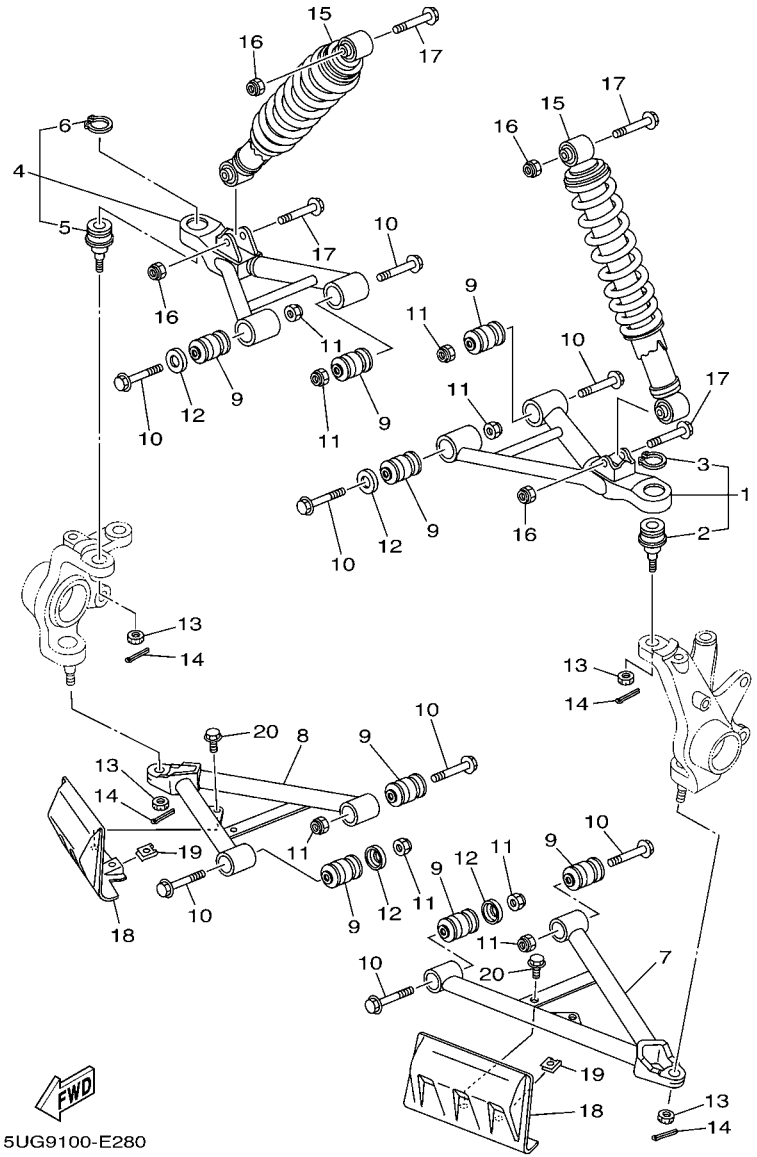

FIG. 28 FRONT SUSPENSION & WHEEL

REF. NO.	PART NO.	DESCRIPTION	USA	CAN				REMARKS
1	5UG–F3540–00	FRONT UPPER ARM COMP. (LEFT)	1	1				
2	5FU–F3549–00	.BALL JOINT 1	1	1				
3	93410–32826	.CIRCLIP	1	1				
4	5UG–F3550–00	FRONT UPPER ARM COMP. (RIGHT)	1	1				
5	5FU–F3549–00	.BALL JOINT 1	1	1				
6	93410–32826	.CIRCLIP	1	1				
7	5UG–F357A–00	ARM,FR. LWR. LH.	1	1				
8	5UG–F358A–00	ARM,FR. LWR. RH.	1	1				
9	5KM–23526–00	BUSH	8	8				
10	90105–10253	BOLT, FLANGE	8	8				
11	90185–10060	NUT, SELF-LOCKING	8	8				
12	5KM–22149–00	WASHER	4	4				
13	90171–12039	NUT, CASTLE	4	4				
14	91401–25020	PIN, COTTER	4	4				
15	5UG–F3350–01	SHOCK ABSORBER ASSY	2	2				
16	90185–10060	NUT, SELF-LOCKING	4	4				
17	90105–108B1	BOLT, FLANGE	4	4				
18	5UG–F3123–00	COVER, LOWER 1	2	2				
19	90183–06053	NUT, SPRING	4	4				
20	95807–06012	BOLT, FLANGE	4	4				

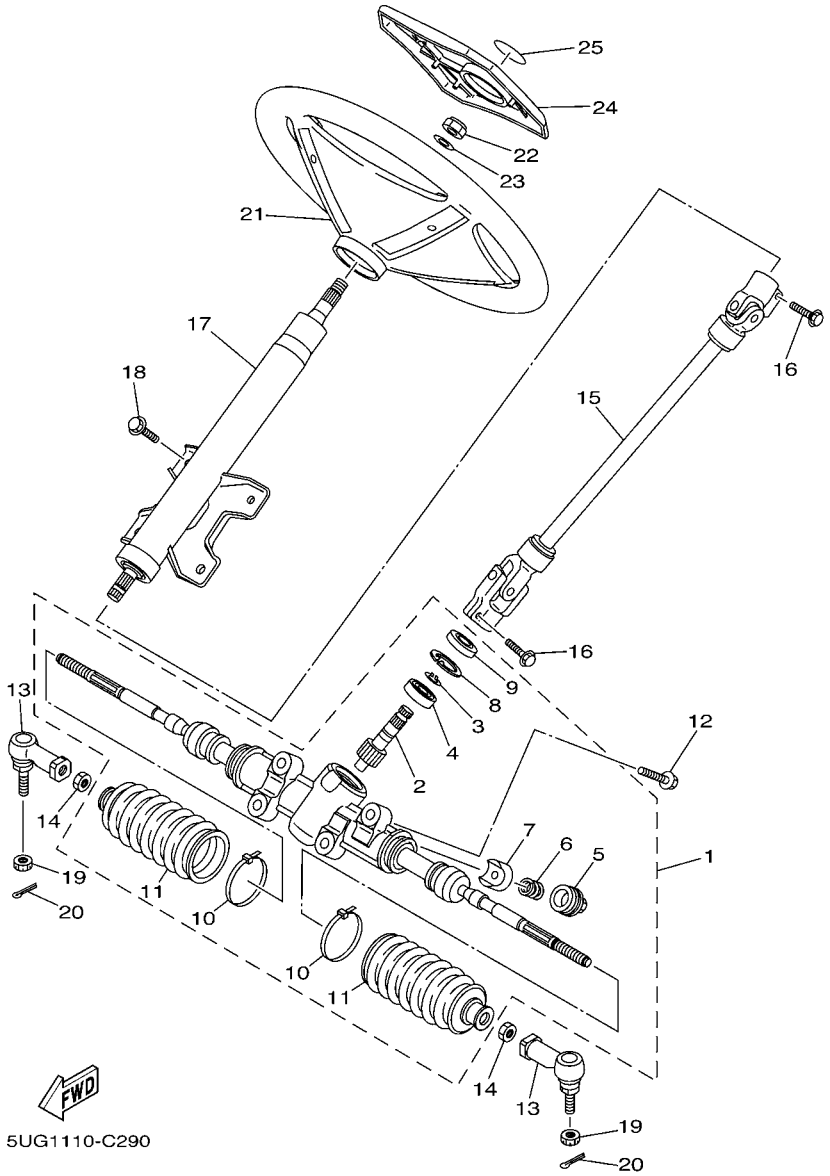

FIG. 29 STEERING

REF. NO.	PART NO.	DESCRIPTION	USA	CAN				REMARKS
1	5UG–F3400–00	STEERING ASSY	1	1				
2	5UG–F3863–00	.GEAR, STEERING DRIVE	1	1				
3	5UG–F3183–00	.CIRCLIP	1	1				
4	5UG–F3812–00	.PLANE BEARING, STEERING	1	1				
5	5UG–F387G–00	.COVER, ADJUST	1	1				
6	5UG–F387K–00	.SPRING, PRESSURE	1	1				
7	5UG–F387F–00	.PAD, PRESSURE	1	1				
8	5UG–F387J–00	.RING, STOPPER	1	1				
9	5UG–F3844–00	.SEAL	1	1				
10	5UG–F3489–00	.BAND	2	2				
11	5UG–F3527–00	.SEAL, DUST 1	2	2				
12	95027–10025	BOLT, FLANGE	4	4				
13	5UG–F3841–00	JOINT, UNIVERSAL 1	2	2				
14	4XE–F3833–00	NUT 1	2	2				
15	5UG–F3840–00	STEERING SHAFT ASSY	1	1				
16	95027–08025	BOLT, FLANGE	2	2				
17	5UG–F3811–00	COLUMN, STEERING	1	1				
18	95817–08016	BOLT, FLANGE	4	4				
19	90171–12039	NUT, CASTLE	2	2				
20	91401–20020	PIN, COTTER	2	2				
21	JN3–F3838–00	WHEEL, STEERING	1	1				
22	90185–12061	NUT, SELF-LOCKING	1	1				
23	92907–12200	WASHER	1	1				
24	5UG–F3818–00	COVER, STEERING	1	1				
25	5FU–F175B–01	TUNING FORK MARK	1	1				

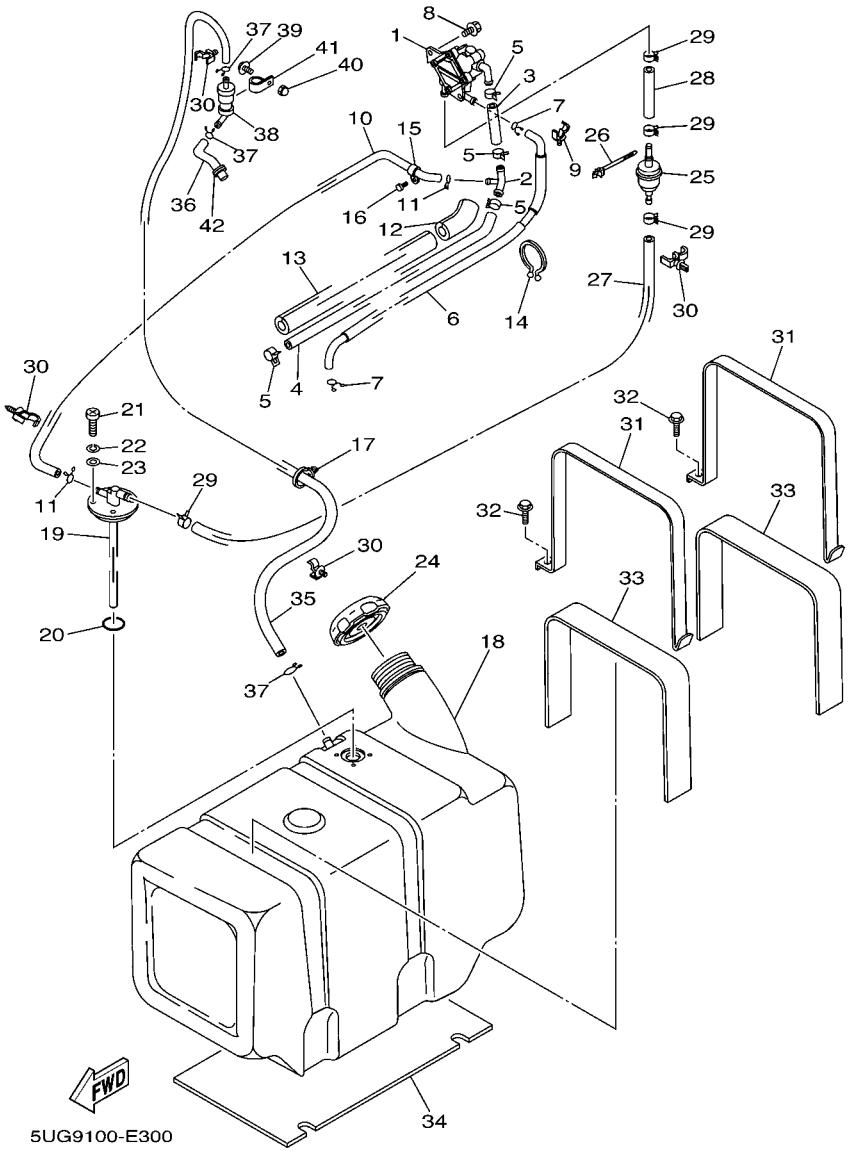

FIG. 30 FUEL TANK

REF. NO.	PART NO.	DESCRIPTION	USA	CAN				REMARKS
1	5UG–13910–00	FUEL PUMP ASSY	1	1				
2	90413–09001	WAY 3	1	1				
3	5UG–14294–00	HOSE	1	1				
4	5UG–14295–00	PIPE, FUEL	1	1				
5	90467–12053	CLIP	4	4				
6	5UG–E3895–00	HOSE, AIR	1	1				
7	90467–10008	CLIP	2	2				
8	95027–06016	BOLT, FLANGE	2	2				
9	90464–12830	CLAMP	1	1				
10	5UG–14298–00	PIPE	1	1				
11	90467–10008	CLIP	2	2				
12	5UG–14271–00	INSULATOR	1	1				
13	5UG–14271–50	INSULATOR	1	1				
14	90464–23041	CLAMP	1	1				
15	90464–11803	CLAMP	1	1				
16	90338–05834	PLUG	1	1				
17	90464–25826	CLAMP	1	1				
18	5UG–F4111–01	TANK, FUEL	1	1				
19	5UG–F4300–00	FUEL PIPE JOINT	1	1				
20	93210–228C4	O-RING	1	1				
21	98507–05014	SCREW, PAN HEAD	4	4				
22	92907–05100	WASHER, SPRING	4	4				
23	92907–05600	WASHER, PLATE	4	4				
24	2P5–24610–00	CAP ASSY	1	1				
25	JN6–F4560–00	FILTER ASSY	1	1				
26	90464–38800	CLAMP	1	1				
27	5UG–F4311–00	PIPE, FUEL 1	1	1				

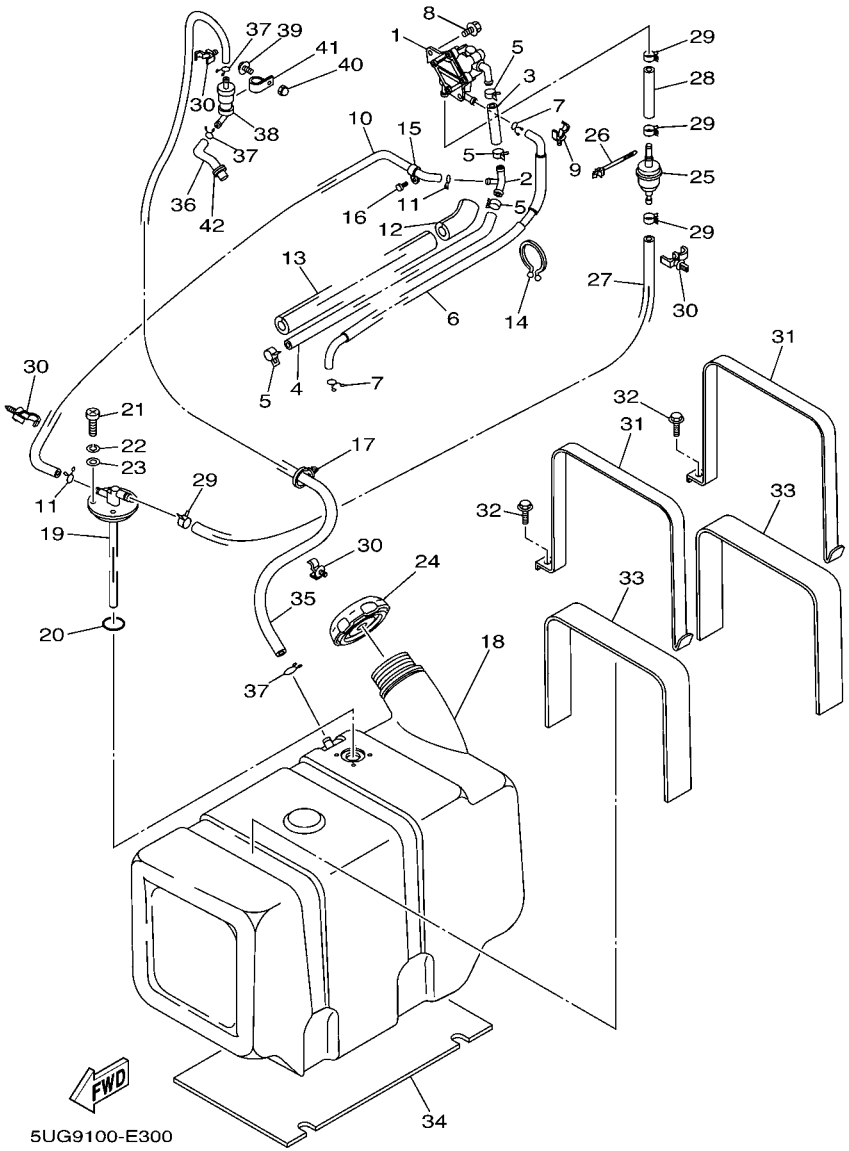

FIG. 30 FUEL TANK

REF. NO.	PART NO.	DESCRIPTION	USA	CAN				REMARKS
28	5UG–F4313–00	PIPE 3	1	1				
29	90467–12053	CLIP	4	4				
30	90464–12830	CLAMP	5	5				
31	5UG–F4157–00	STAY, FUEL TANK 1	2	2				
32	90105–08879	BOLT, FLANGE	2	2				
33	5UG–F414H–00	DAMPER, PLATE 1	2	2				
34	5UG–F414J–00	DAMPER, PLATE 2	1	1				
35	5UG–F4312–00	PIPE 2	1	1				
36	5UG–F4314–00	PIPE 4	1	1				
37	90467–10008	CLIP	3	3				
38	5RB–24180–00	ROLL OVER VALVE ASSY	1	1				
39	98907–05010	SCREW, BIND	1	1				
40	90176–05054	NUT, CROWN	1	1				
41	90461–15139	CLAMP	1	1				
42	90480–15058	GROMMET	1	1				

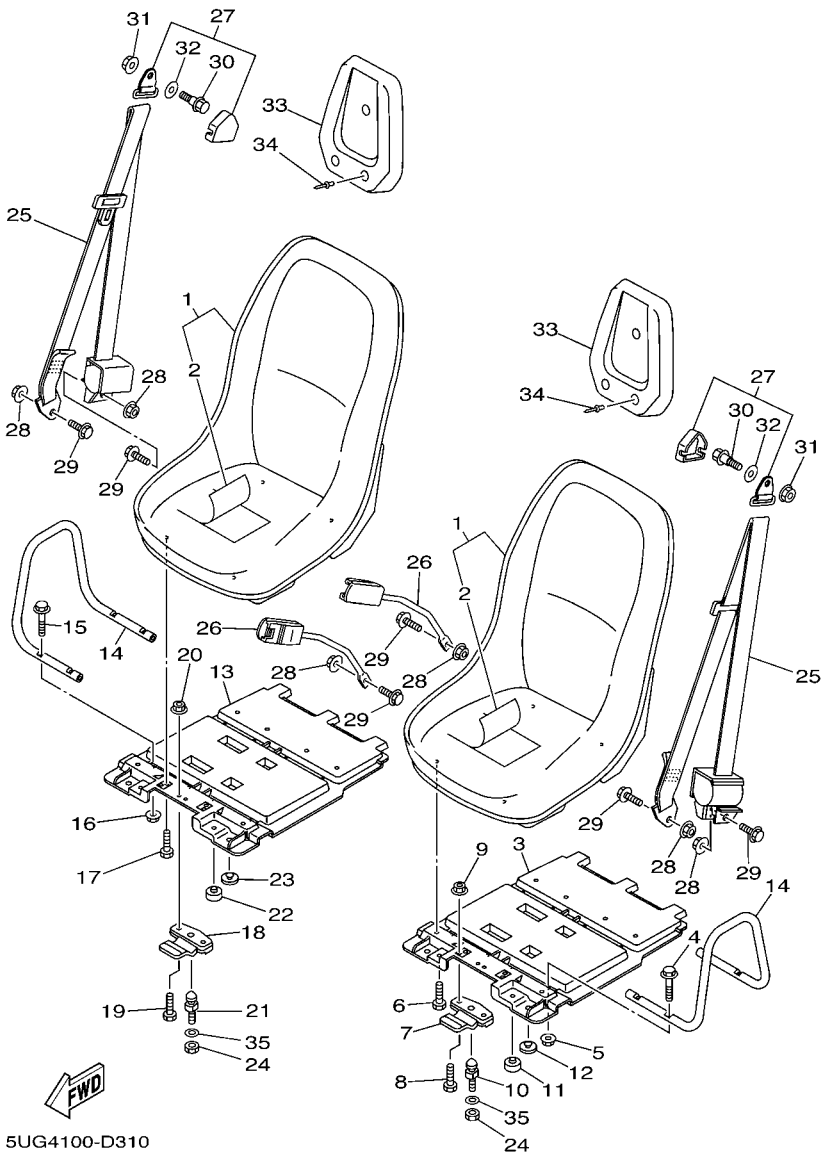

FIG. 31 SEAT

REF. NO.	PART NO.	DESCRIPTION	USA	CAN				REMARKS
1	5UG–F4710–00	SINGLE SEAT ASSY	2	2				
2	5UG–F470F–00	.SEAT COVER COMP.	1	1				
3	5UG–F470E–00	BOTTOM PLATE COMP.	1	1				
4	9581P–08030	BOLT, FLANGE	4	4				
5	95607–08200	NUT, SELF-LOCKING	4	4				
6	95827–08020	BOLT, FLANGE	4	4				
7	F1B–U3850–01	SEAT LOCK ASSY	1	1				
8	95827–06040	BOLT, FLANGE	2	2				
9	95607–06200	NUT, SELF U-FLANGE	2	2				
10	GH1–U3774–00	PIN	1	1				
11	4XE–F4747–00	DAMPER, SEAT	2	2				
12	371–82121–00	PAD, BATTERY	2	2				
13	5UG–F470E–00	BOTTOM PLATE COMP.	1	1				
14	2P5–F474W–00	ASSIST,GRIP 2	2	2				
15	9581P–08030	BOLT, FLANGE	4	4				
16	95607–08200	NUT, SELF-LOCKING	4	4				
17	95827–08020	BOLT, FLANGE	4	4				
18	F1B–U3850–01	SEAT LOCK ASSY	1	1				
19	95827–06040	BOLT, FLANGE	2	2				
20	95607–06200	NUT, SELF U-FLANGE	2	2				
21	GH1–U3774–00	PIN	1	1				
22	4XE–F4747–00	DAMPER, SEAT	2	2				
23	371–82121–00	PAD, BATTERY	2	2				
24	90185–10060	NUT, SELF-LOCKING	2	2				
25	5UG–G6241–00	BELT	2	2				
26	5UG–G6242–00	BELT 2	2	2				
27	5UG–F4796–00	COVER	2	2				

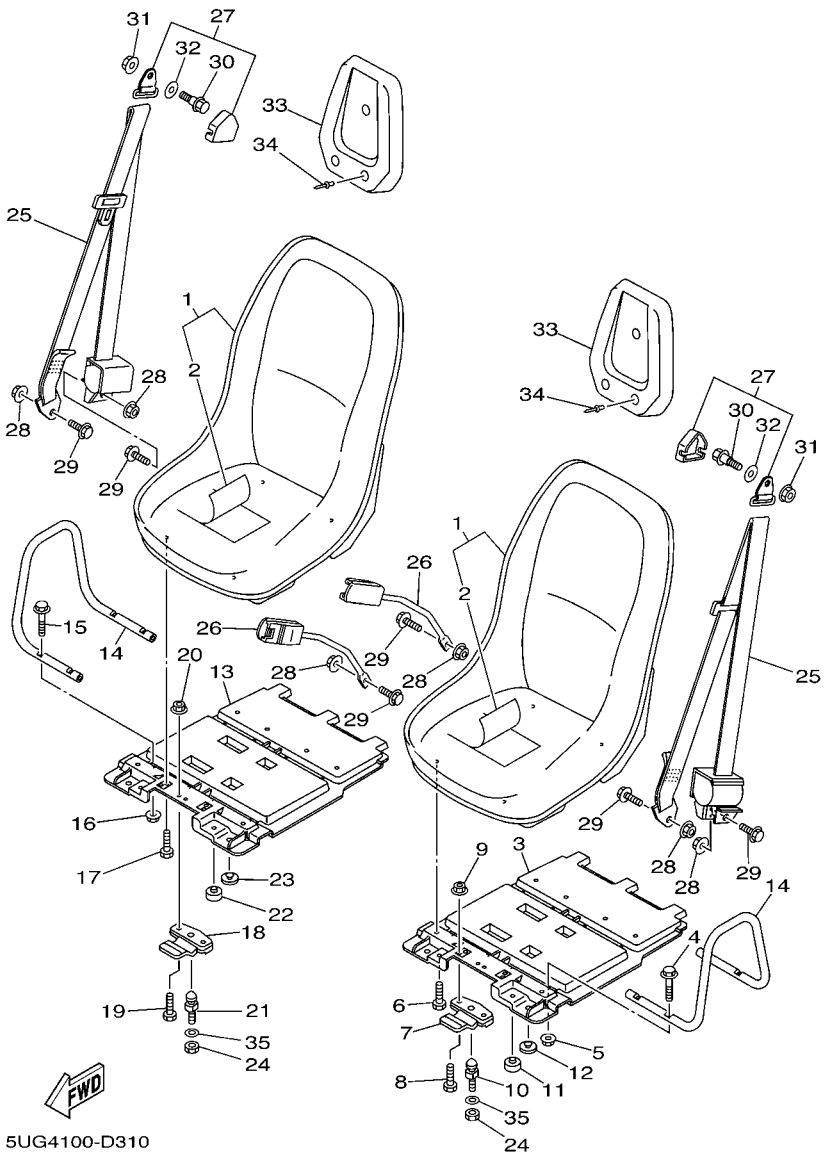

FIG. 31 SEAT

REF. NO.	PART NO.	DESCRIPTION	USA	CAN				REMARKS
28	9560P–10200	NUT, FLANGE	6	6				
29	95817–10022	BOLT, FLANGE	6	6				
30	5UG–F3394–00	BOLT, SPECIAL	2	2				
31	5UG–F4735–00	SPEED NUT	2	2				
32	90201–11800	WASHER, PLATE	2	2				
33	5UG–F472L–00	HEAD REST	2	2				
34	90267–48820	RIVET, BLIND	6	6				
35	90201–109U6	WASHER, PLATE	2	2				

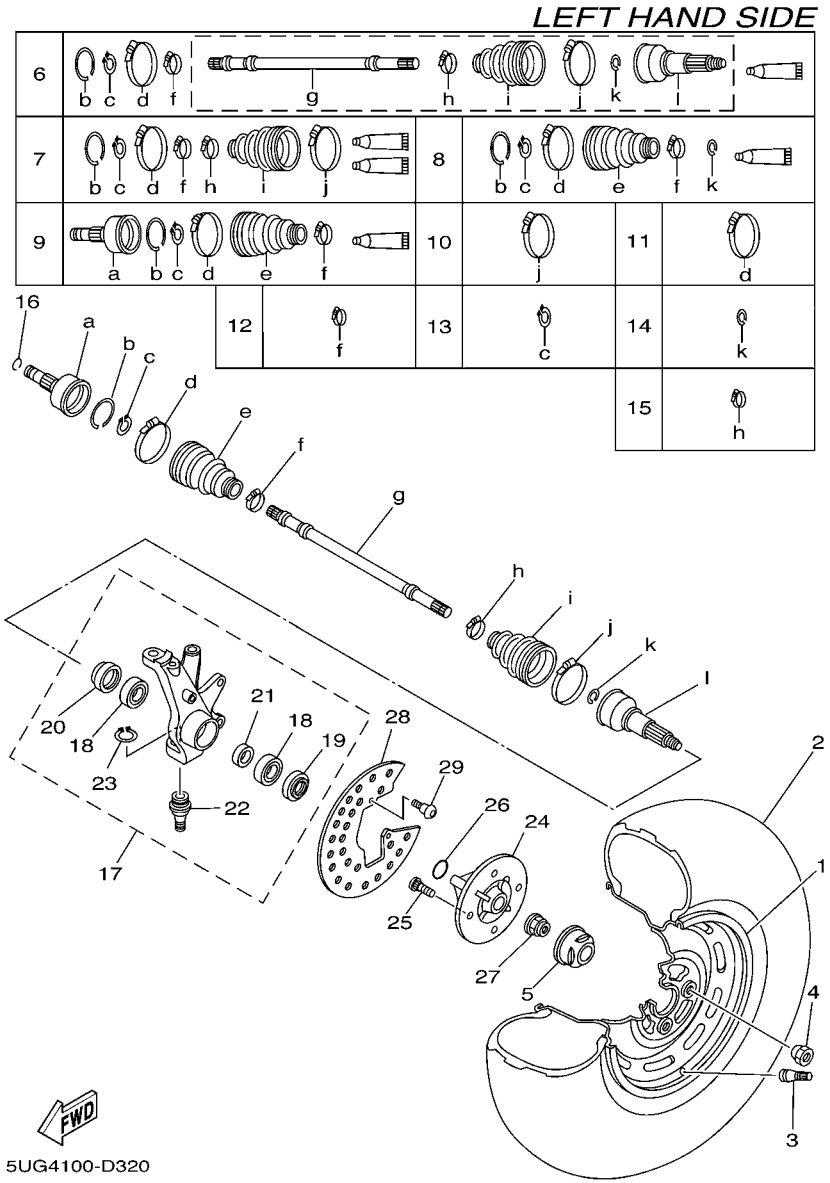

FIG. 32 FRONT WHEEL

REF. NO.	PART NO.	DESCRIPTION	USA	CAN				REMARKS
1	5UG–F5180–10	WHEEL COMP.	1	1				
2	94108–12809	TIRE (25X8.00-12 M951Y TL)	1	1				CHENG SHIN
3	93900–00813	VALVE, RIM (TR413)	1	1				
4	90179–10540	NUT	4	4				
5	2P5–F512A–00	CAP, WHEEL	1	1				
6	5UG–F510F–20	BALL JOINT SET	1	1				
7	5UG–F510G–10	BOOT SET (BALL JOINT)	1	1				
8	5KM–2510H–10	BOOT SET (DOUBLE OFFSET JOINT)	1	1				
9	5KM–2510J–20	DOUBLE OFF SET JOINT	1	1				LH
10	5UG–F511G–00	BOOT BAND (BALL JOINT)	1	1				
11	5UG–F511H–00	BOOT BAND(DOUBLE OFFSET JOINT)	1	1				
12	3HN–2512G–01	BOOT BAND (SMALL)	1	1				
13	2HR–2512J–00	SNAP RING	1	1				
14	5UG–F512H–00	CIRCLIP	1	1				
15	5UG–F512G–00	BOOT BAND (SMALL)	1	1				
16	5KM–45531–10	CLIP, DRIVE SHAFT	1	1				
17	5UG–F3501–11	STEERING KNUCKLE ASSY (LEFT)	1	1				
18	93306–006Y4	.BEARING	2	2				
19	93106–38046	.OIL SEAL	1	1				
20	93106–38047	.OIL SEAL	1	1				
21	90387–30008	.COLLAR	1	1				
22	5FU–F3549–00	.BALL JOINT 1	1	1				
23	93410–32826	.CIRCLIP	1	1				
24	5UG–F5111–10	HUB, FRONT	1	1				
25	90114–10012	BOLT, SERRATION	4	4				
26	93210–27666	O-RING	1	1				
27	90179–24003	NUT	1	1				

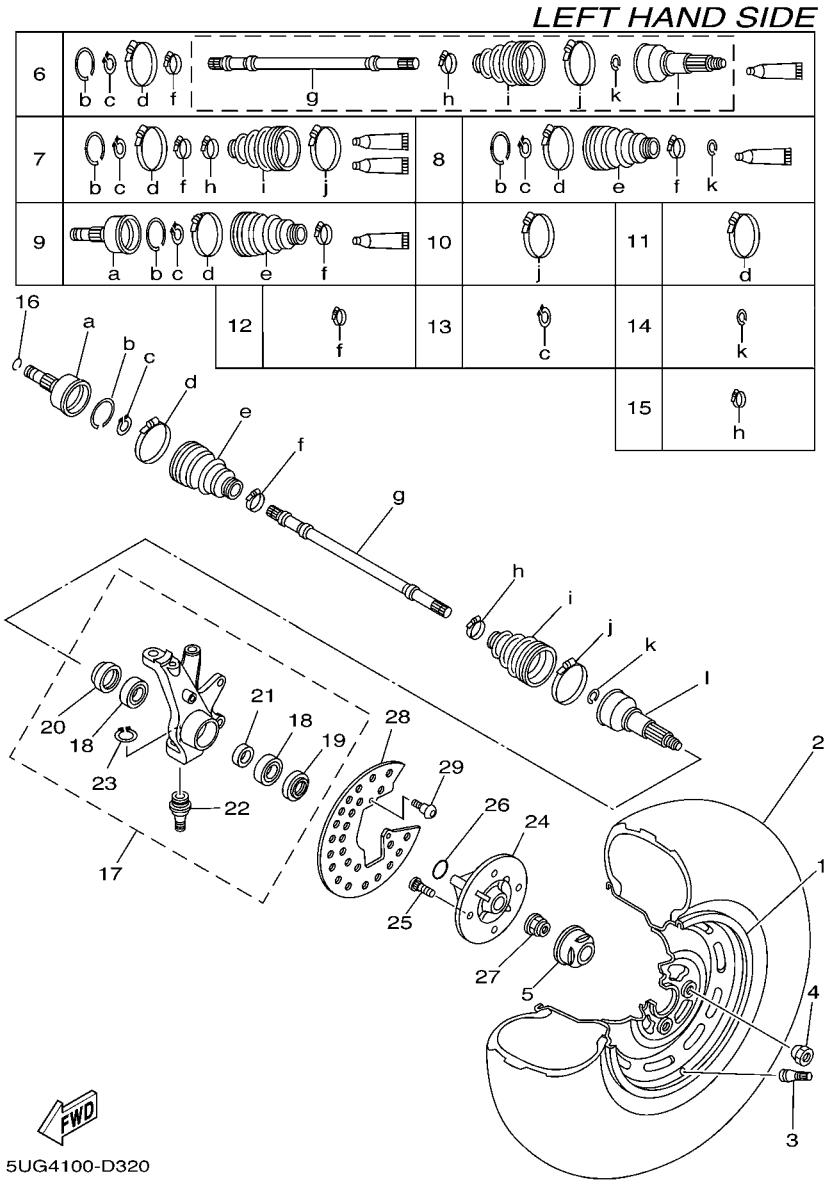

FIG. 32 FRONT WHEEL

REF. NO.	PART NO.	DESCRIPTION	USA	CAN				REMARKS
28	5UG–F514A–00	RING, WHEEL 1 (LEFT)	1	1				
29	90149–06280	SCREW	2	2				

FIG. 33 FRONT WHEEL 2

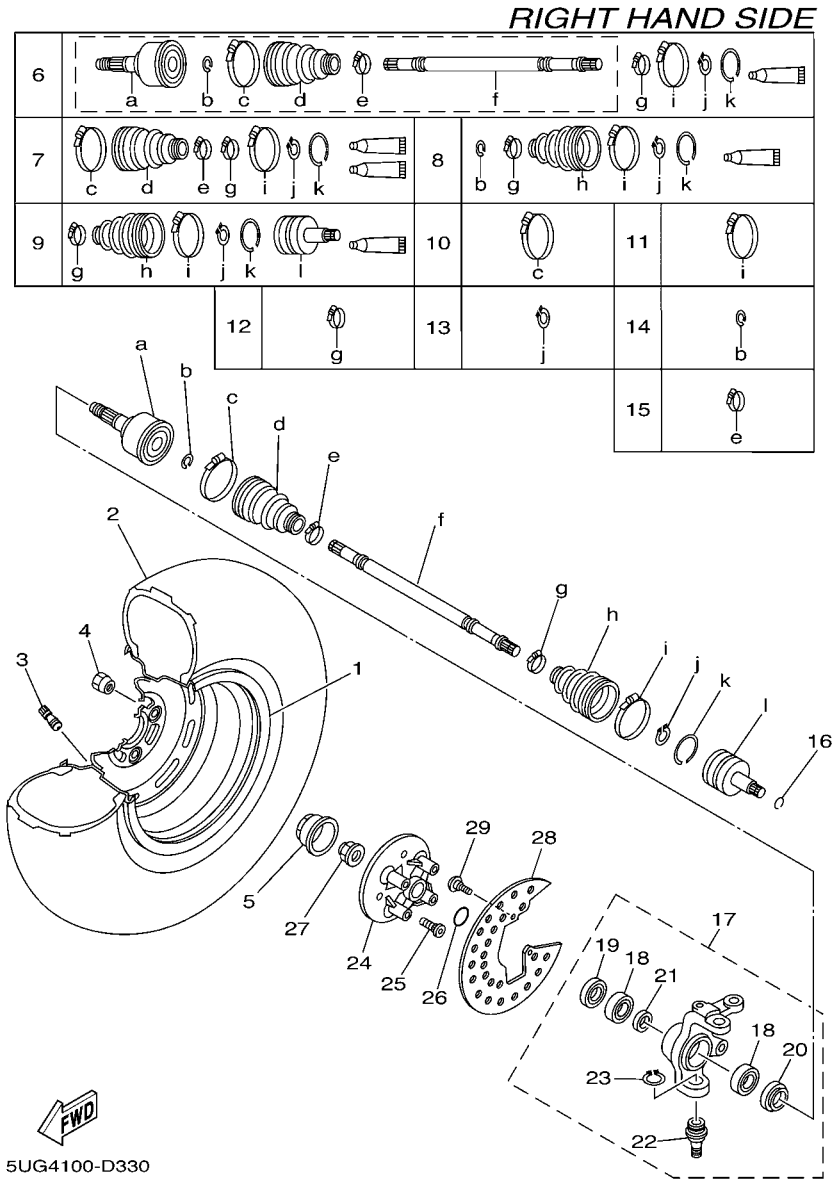

REF. NO.	PART NO.	DESCRIPTION	USA	CAN				REMARKS
1	5UG–F5180–10	WHEEL COMP.	1	1				
2	94108–12809	TIRE (25X8.00-12 M951Y TL)	1	1				CHENG SHIN
3	93900–00813	VALVE, RIM (TR413)	1	1				
4	90179–10540	NUT	4	4				
5	2P5–F512A–00	CAP, WHEEL	1	1				
6	5UG–F510F–20	BALL JOINT SET	1	1				
7	5UG–F510G–10	BOOT SET (BALL JOINT)	1	1				
8	5KM–2510H–10	BOOT SET (DOUBLE OFFSET JOINT)	1	1				
9	5KM–2510J–30	DOUBLE OFF SET JOINT	1	1				RH
10	5UG–F511G–00	BOOT BAND (BALL JOINT)	1	1				
11	5UG–F511H–00	BOOT BAND(DOUBLE OFFSET JOINT)	1	1				
12	3HN–2512G–01	BOOT BAND (SMALL)	1	1				
13	2HR–2512J–00	SNAP RING	1	1				
14	5UG–F512H–00	CIRCLIP	1	1				
15	5UG–F512G–00	BOOT BAND (SMALL)	1	1				
16	93450–22119	CIRCLIP	1	1				
17	5UG–F3502–11	STEERING KNUCKLE ASSY (RIGHT)	1	1				
18	93306–006Y4	.BEARING	2	2				
19	93106–38046	.OIL SEAL	1	1				
20	93106–38047	.OIL SEAL	1	1				
21	90387–30008	.COLLAR	1	1				
22	5FU–F3549–00	.BALL JOINT 1	1	1				
23	93410–32826	.CIRCLIP	1	1				
24	5UG–F5111–10	HUB, FRONT	1	1				
25	90114–10012	BOLT, SERRATION	4	4				
26	93210–27666	O-RING	1	1				
27	90179–24003	NUT	1	1				

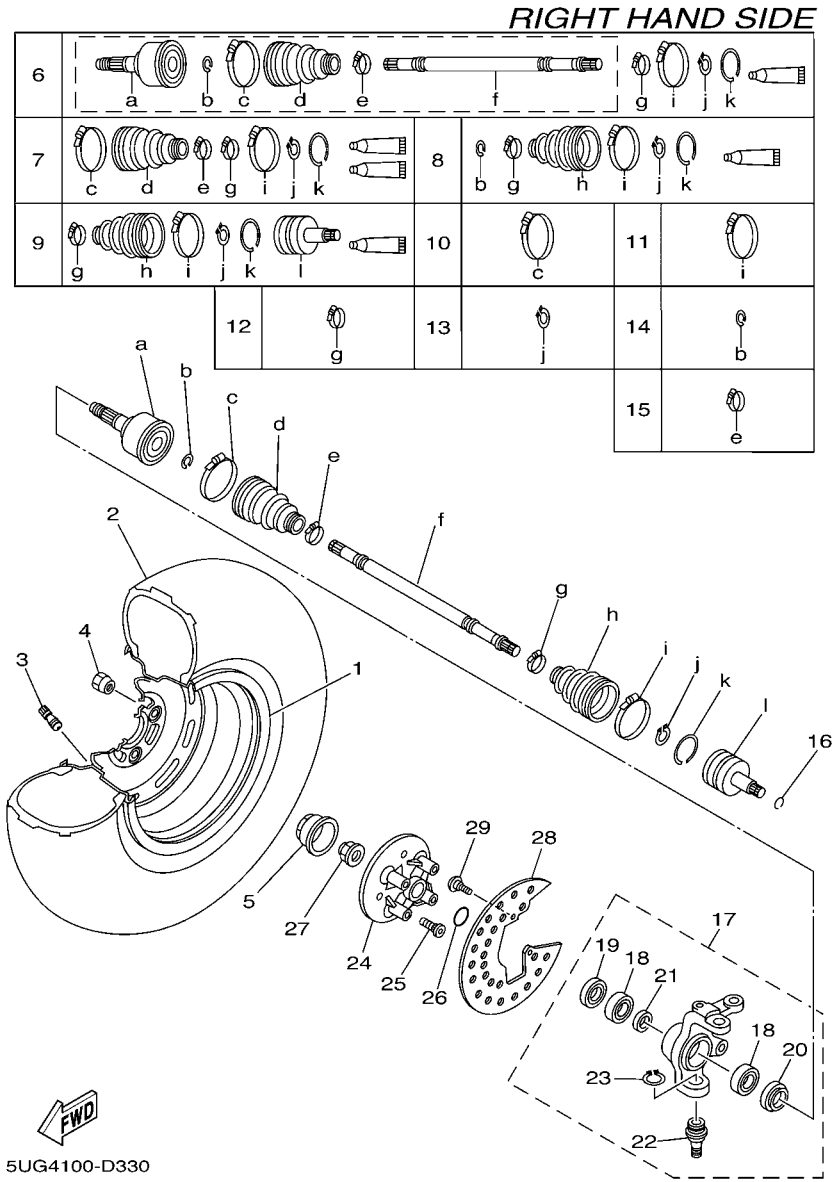

FIG. 33 FRONT WHEEL 2

REF. NO.	PART NO.	DESCRIPTION	USA	CAN				REMARKS
28	5UG–F514A–00	RING, WHEEL 1 (LEFT)	1	1				
29	90149–06280	SCREW	2	2				

FIG. 34 FRONT BRAKE CALIPER

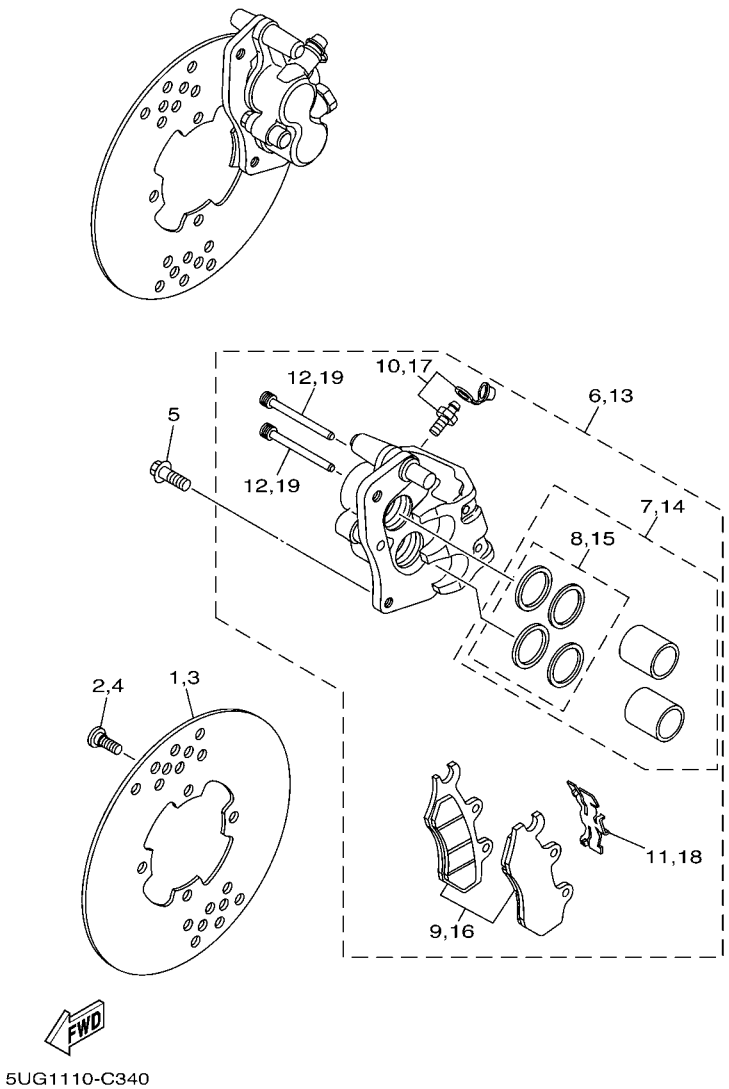

REF. NO.	PART NO.	DESCRIPTION	USA	CAN				REMARKS
1	5UG–F582T–00	DISC, BRAKE (LEFT)	1	1				
2	90149–08268	SCREW	4	4				
3	5UG–F582T–00	DISC, BRAKE (LEFT)	1	1				
4	90149–08268	SCREW	4	4				
5	90105–10082	BOLT, FLANGE	4	4				
6	3LD–2580T–01	CALIPER ASSY 1	1	1				RIGHT
7	3LD–W0057–00	.PISTON ASSY, CALIPER	1	1				
8	3JD–W0047–00	..CALIPER SEAL KIT	1	1				
9	3LD–W0045–00	.BRAKE PAD KIT	1	1				
10	1UY–W0048–50	.BLEED SCREW KIT	1	1				
11	3LD–25934–01	.SPRING, PAD	1	1				
12	3LD–25924–00	.PIN, PAD	2	2				
13	3LD–2580U–01	CALIPER ASSY 2	1	1				LEFT
14	3LD–W0057–00	.PISTON ASSY, CALIPER	1	1				
15	3JD–W0047–00	..CALIPER SEAL KIT	1	1				
16	3LD–W0045–10	.BRAKE PAD KIT	1	1				
17	1UY–W0048–50	.BLEED SCREW KIT	1	1				
18	3LD–25934–01	.SPRING, PAD	1	1				
19	3LD–25924–00	.PIN, PAD	2	2				

FIG. 35 REAR WHEEL

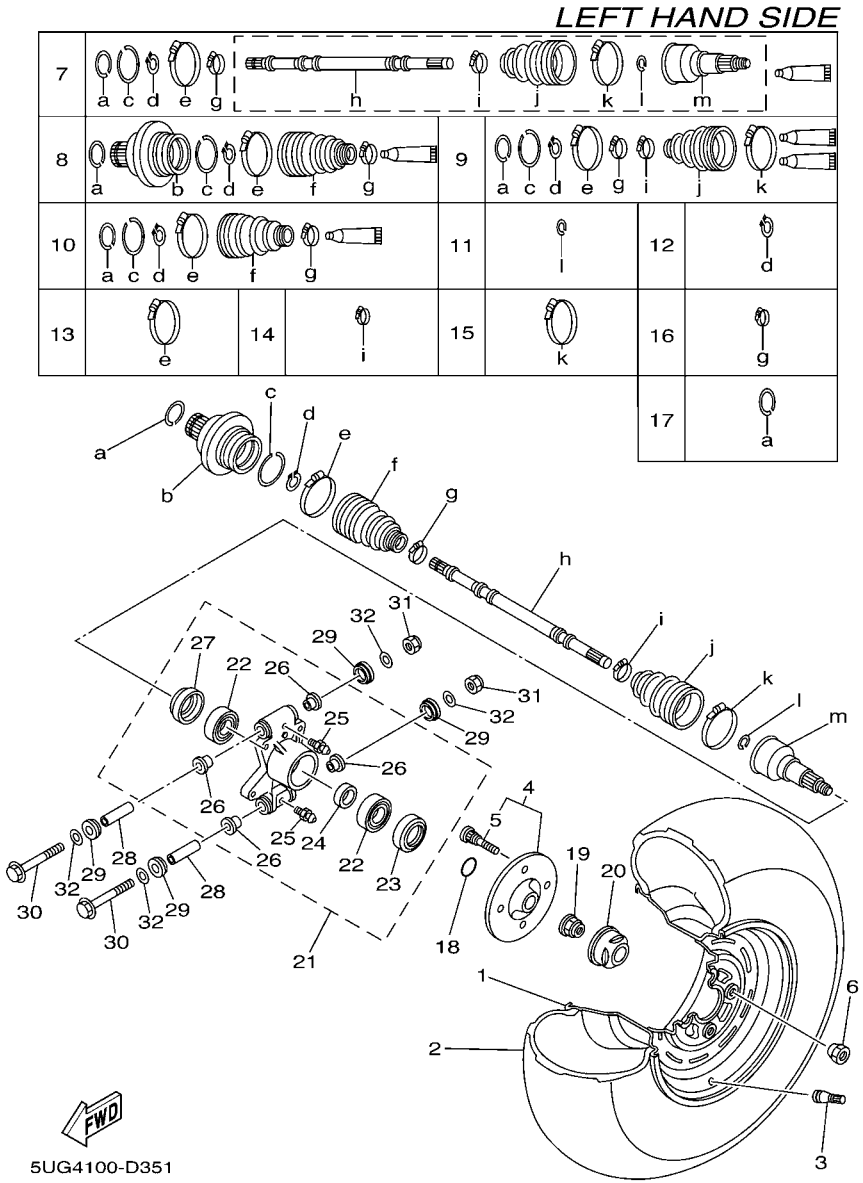

REF. NO.	PART NO.	DESCRIPTION	USA	CAN				REMARKS
1	5UG–F5390–10	REAR WHEEL COMP.	1	1				
2	94110–12805	TIRE (25X10.00-12 M952Y TL)	1	1				CHENG SHIN
3	93900–00813	VALVE, RIM (TR413)	1	1				
4	5UG–F5310–20	HUB ASSY	1	1				
5	90114–10012	.BOLT, SERRATION	4	4				
6	90179–10540	NUT	4	4				
7	5UG–F530T–20	BALL JOINT SET	1	1				LH
8	5UG–F530V–00	DOUBLE OFF SET JOINT	1	1				LH
9	5UG–F530X–00	BOOT SET (BALL JOINT)	1	1				
10	5UG–F530Y–00	BOOT SET (DOUBLE OFFSET JOINT)	1	1				
11	5UG–F512H–00	CIRCLIP	1	1				
12	5UG–F512J–00	SNAP RING	1	1				
13	5UG–F511H–00	BOOT BAND(DOUBLE OFFSET JOINT)	1	1				
14	5UG–F512G–00	BOOT BAND (SMALL)	1	1				
15	5UG–F511G–00	BOOT BAND (BALL JOINT)	1	1				
16	5UG–F510U–00	BOOT BAND (SMALL)	1	1				
17	5KM–2536E–10	CLIP, SPRING	1	1				
18	93210–27666	O-RING	1	1				
19	90179–24003	NUT	1	1				
20	2P5–F512A–00	CAP, WHEEL	1	1				
21	5UG–F530F–11	REAR KNUCKLE ASSY	1	1				
22	93306–206Y2	.BEARING	2	2				
23	93106–42800	.OIL SEAL	1	1				
24	90387–30008	.COLLAR	1	1				
25	93700–06004	.NIPPLE, GREASE	2	2				
26	90381–17067	.BUSH, SOLID	4	4				
27	93106–38800	.OIL SEAL	1	1				

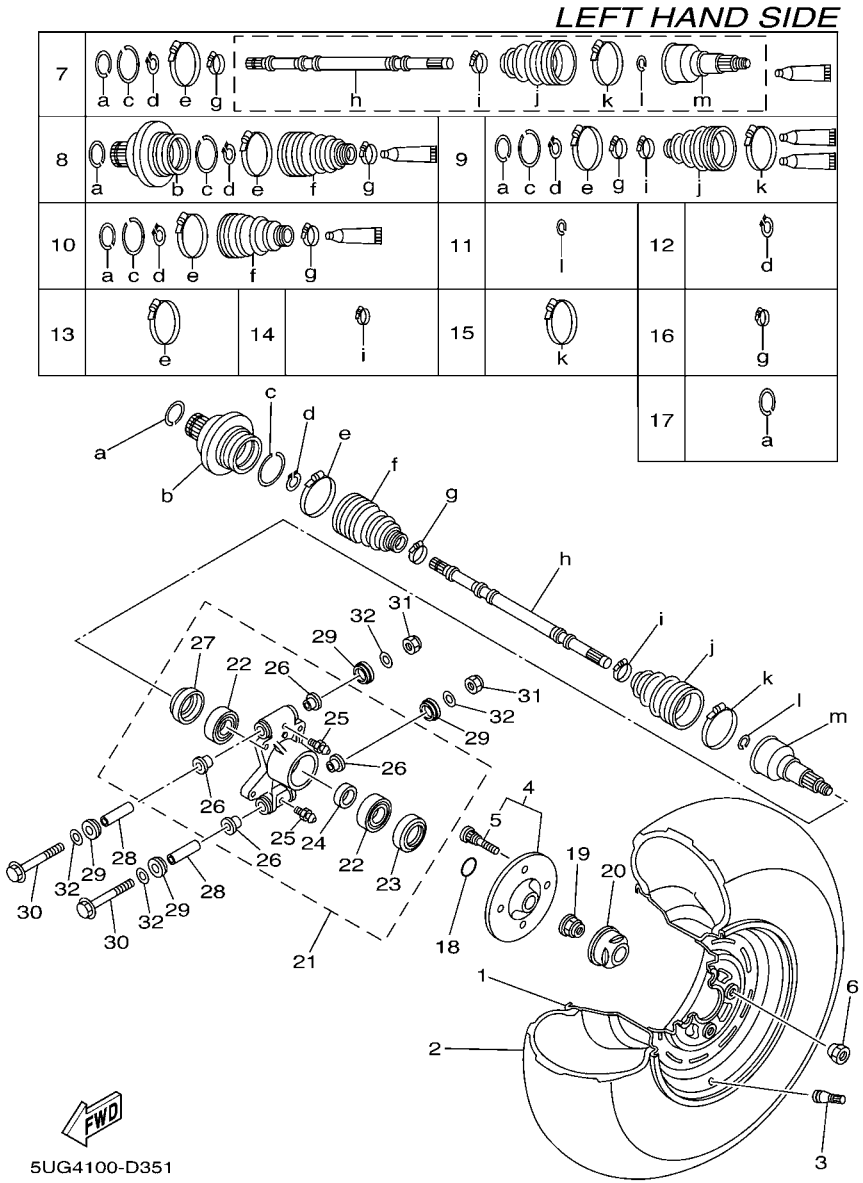

FIG. 35 REAR WHEEL

REF. NO.	PART NO.	DESCRIPTION	USA	CAN				REMARKS
28	5KM–23448–00	SPACER	2	2				
29	5UG–23517–00	COVER, THRUST 1	4	4				
30	90105–10409	BOLT, FLANGE	2	2				
31	90185–10060	NUT, SELF-LOCKING	2	2				
32	90201–101J1	WASHER, PLATE	4	4				

FIG. 36 REAR WHEEL 2

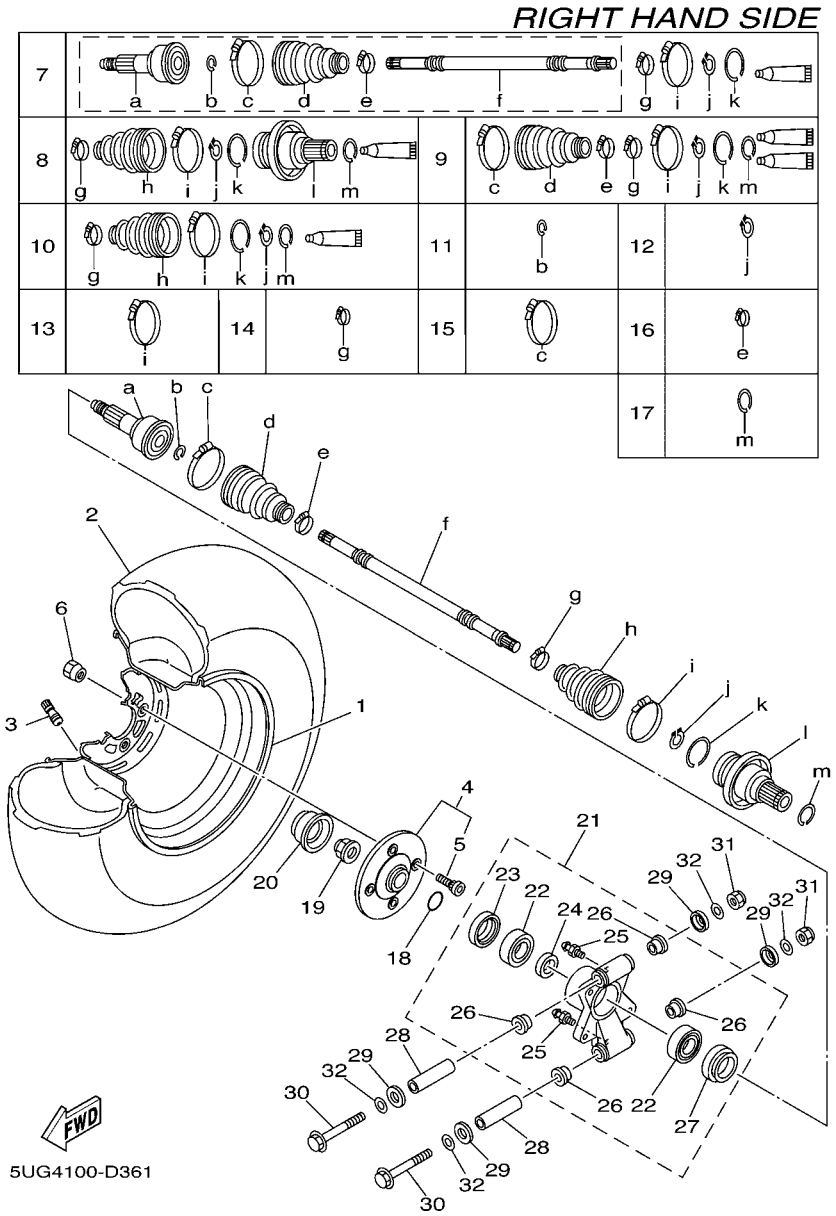

REF. NO.	PART NO.	DESCRIPTION	USA	CAN				REMARKS
1	5UG–F5390–10	REAR WHEEL COMP.	1	1				
2	94110–12805	TIRE (25X10.00-12 M952Y TL)	1	1				CHENG SHIN
3	93900–00813	VALVE, RIM (TR413)	1	1				
4	5UG–F5310–20	HUB ASSY	1	1				
5	90114–10012	.BOLT, SERRATION	4	4				
6	90179–10540	NUT	4	4				
7	5UG–F530U–20	BALL JOINT SET	1	1				RH
8	5UG–F530W–00	DOUBLE OFF SET JOINT	1	1				RH
9	5UG–F530X–00	BOOT SET (BALL JOINT)	1	1				
10	5UG–F530Y–00	BOOT SET (DOUBLE OFFSET JOINT)	1	1				
11	5UG–F512H–00	CIRCLIP	1	1				
12	5UG–F512J–00	SNAP RING	1	1				
13	5UG–F511H–00	BOOT BAND(DOUBLE OFFSET JOINT)	1	1				
14	5UG–F512G–00	BOOT BAND (SMALL)	1	1				
15	5UG–F511G–00	BOOT BAND (BALL JOINT)	1	1				
16	5UG–F510U–00	BOOT BAND (SMALL)	1	1				
17	5KM–2536E–10	CLIP, SPRING	1	1				
18	93210–27666	O-RING	1	1				
19	90179–24003	NUT	1	1				
20	2P5–F512A–00	CAP, WHEEL	1	1				
21	5UG–F530F–11	REAR KNUCKLE ASSY	1	1				
22	93306–206Y2	.BEARING	2	2				
23	93106–42800	.OIL SEAL	1	1				
24	90387–30008	.COLLAR	1	1				
25	93700–06004	.NIPPLE, GREASE	2	2				
26	90381–17067	.BUSH, SOLID	4	4				
27	93106–38800	.OIL SEAL	1	1				

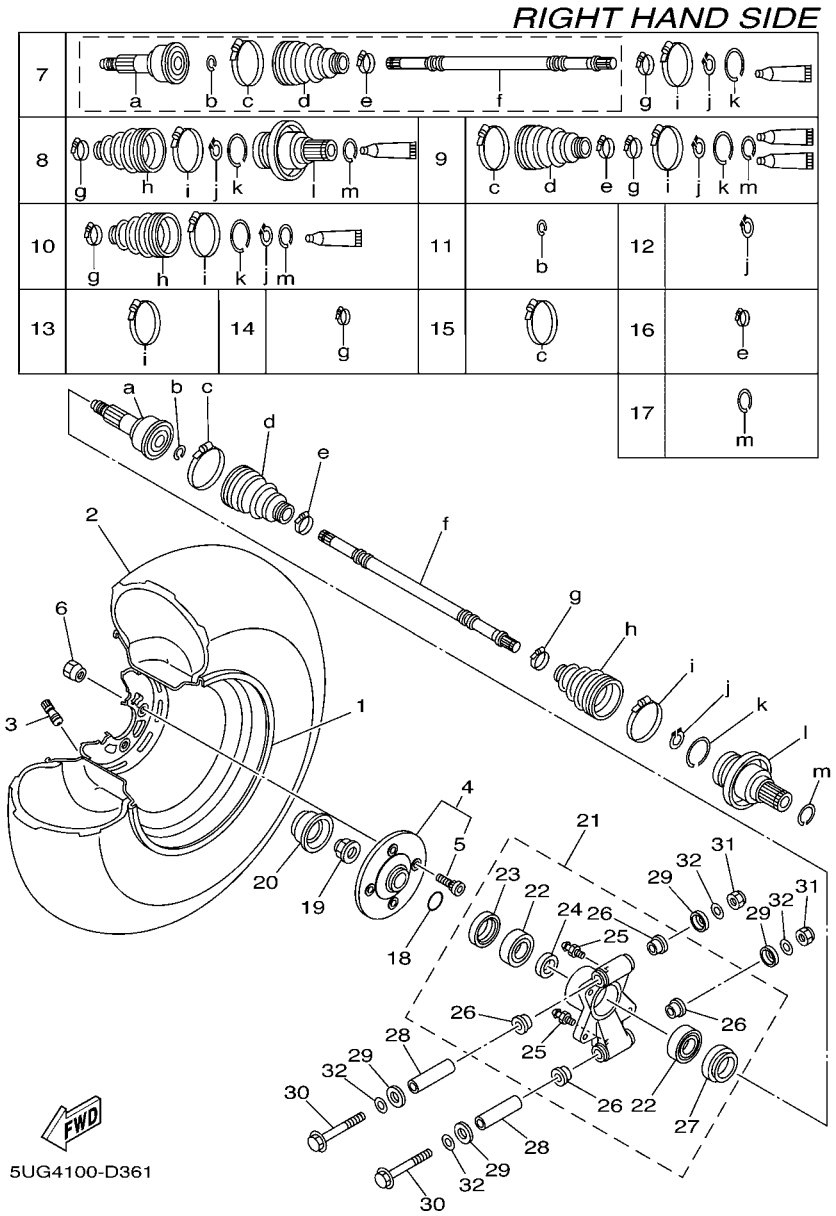

FIG. 36 REAR WHEEL 2

REF. NO.	PART NO.	DESCRIPTION	USA	CAN				REMARKS
28	5KM–23448–00	SPACER	2	2				
29	5UG–23517–00	COVER, THRUST 1	4	4				
30	90105–10409	BOLT, FLANGE	2	2				
31	90185–10060	NUT, SELF-LOCKING	2	2				
32	90201–101J1	WASHER, PLATE	4	4				

FIG. 37 REAR BRAKE CALIPER

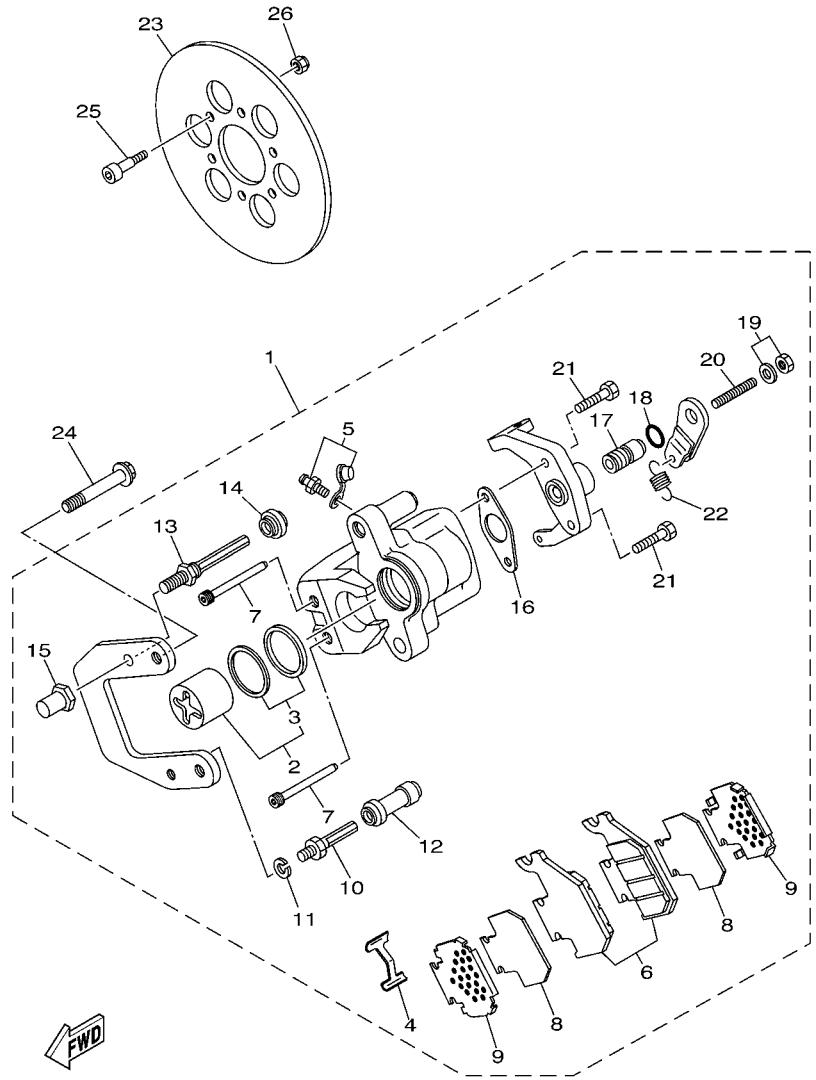

REF. NO.	PART NO.	DESCRIPTION	USA	CAN				REMARKS
1	5UG–2580V–01	CALIPER ASSY, REAR 1	1	1				
2	5UG–W0057–00	.PISTON ASSY, CALIPER	1	1				
3	3GD–W0047–00	..CALIPER SEAL KIT	1	1				
4	4GY–25919–50	.SUPPORT, PAD	1	1				
5	1UY–W0048–50	.BLEED SCREW KIT	1	1				
6	5UG–W0046–01	.BRAKE PAD KIT 2	1	1				
7	5GH–25924–00	.PIN, PAD	2	2				
8	5UG–25827–00	.SHIM, CALIPER	2	2				
9	5GH–25828–00	.SHIM, CALIPER	2	2				
10	1UY–25926–51	.BOLT	1	1				
11	1UY–25938–51	.WASHER, SPRING	1	1				
12	1UY–25937–51	.BOOT 2	1	1				
13	3JD–25926–00	.BOLT	1	1				
14	3JD–25917–00	.BOOT, CALIPER	1	1				
15	3JD–25961–00	.NUT	1	1				
16	5UG–25898–00	.GASKET	1	1				
17	5UG–25978–00	.SHAFT	1	1				
18	5UG–25975–00	.RUBBER, BUSHING	1	1				
19	5UG–25973–00	.NUT	1	1				
20	5UG–25972–00	.ADJUSTBOLT	1	1				
21	5UG–25833–00	.BOLT, FITTING	2	2				
22	5UG–25977–00	.SPRING, RETURN	1	1				
23	5UG–F5831–00	DISC, BRAKE (RIGHT)	1	1				
24	90105–10402	BOLT, FLANGE	2	2				
25	90109–06038	BOLT	6	6				
26	95617–06100	NUT, U	6	6				

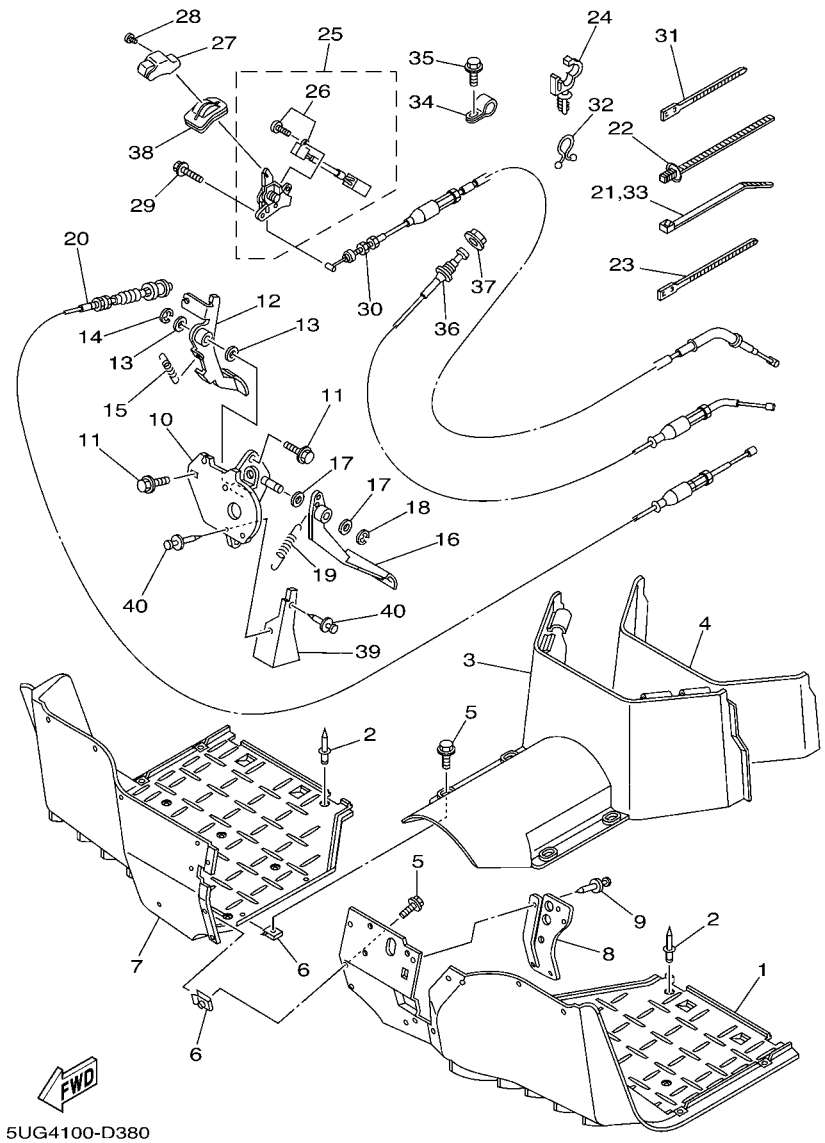

FIG. 38 STAND & FOOTREST

REF. NO.	PART NO.	DESCRIPTION	USA	CAN				REMARKS
1	5UG–F7411–00	FOOTREST 1	1	1				WITH DOOR->FIG.53
2	90267–48820	RIVET, BLIND	22	22				
3	5UG–F7413–00	COVER, FOOTREST	1	1				
4	5UG–F8228–01	SEAL 2	1	1				
5	90119–05001	BOLT, WITH WASHER	7	7				
6	90183–05073	NUT, SPRING	7	7				
7	5UG–F7421–00	FOOTREST 2	1	1				WITH DOOR->FIG.53
8	5UG–F7286–00	COVER, DUST	1	1				
9	90269–06800	RIVET	4	4				
10	5UG–F2548–00	BRACKET, PEDAL SUPPORT	1	1				
11	95817–08020	BOLT, FLANGE	3	3				
12	5UG–F7801–00	ACCEL PEDAL ASSY	1	1				
13	90201–15797	WASHER, PLATE	2	2				
14	93430–12008	CIRCLIP	1	1				
15	90506–20534	SPRING, TENSION	1	1				
16	5UG–F7200–00	PEDAL, BRAKE	1	1				
17	90201–15797	WASHER, PLATE	2	2				
18	93430–12008	CIRCLIP	1	1				
19	90506–20534	SPRING, TENSION	1	1				
20	5UG–26311–10	CABLE, THROTTLE 1	1	1				
21	90464–76800	CLAMP	1	1				
22	90464–20005	CLAMP	1	1				
23	90464–40825	CLAMP	2	2				
24	90464–12830	CLAMP	1	1				
25	5UG–F5970–00	PARKING BRAKE COMP.	1	1				
26	5UG–H251S–00	.SWITCH COMP.	1	1				
27	5UG–F5664–00	KNOB, PARKING LEVER	1	1				

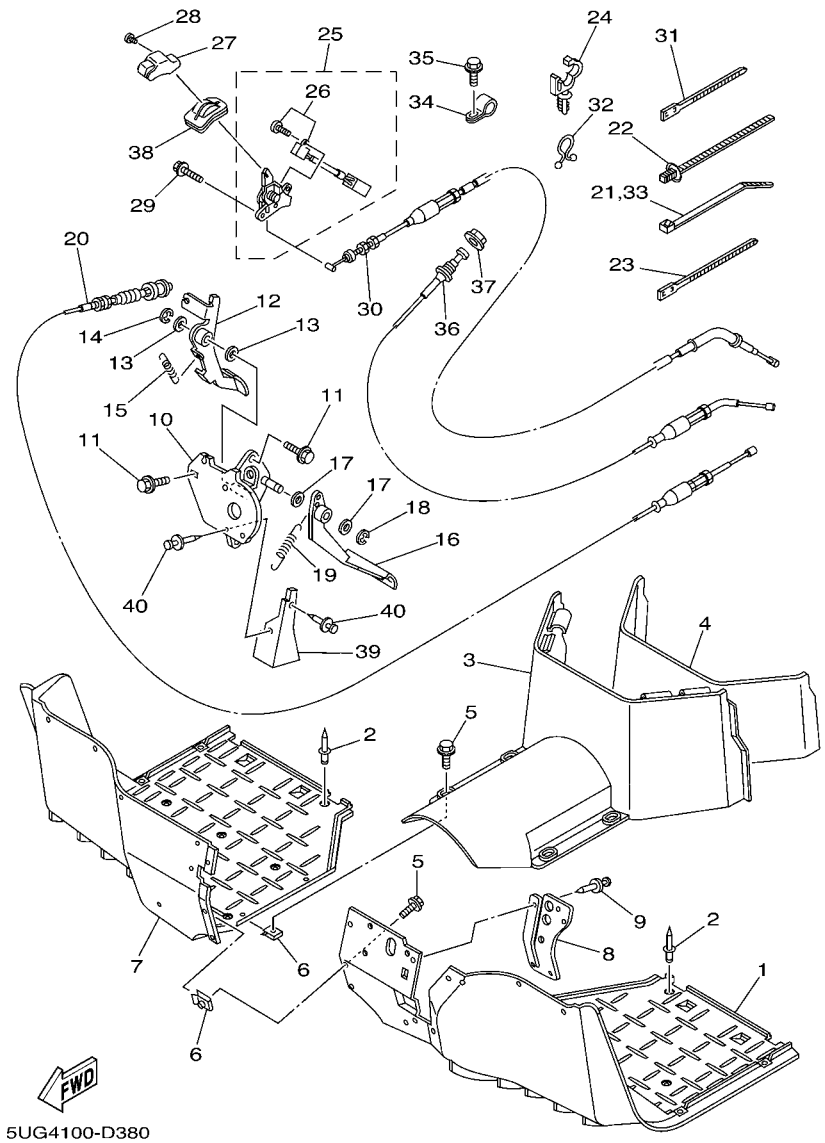

FIG. 38 STAND & FOOTREST

REF. NO.	PART NO.	DESCRIPTION	USA	CAN				REMARKS
28	5UG–F589H–00	SCREW	1	1				
29	95817–06016	BOLT, FLANGE	1	1				
30	5UG–26341–00	CABLE, BRAKE	1	1				
31	90464–31827	CLAMP	2	2				
32	90464–16039	CLAMP	1	1				
33	90464–76800	CLAMP	1	1				
34	90461–08802	CLAMP	1	1				
35	90105–06831	BOLT, FLANGE	1	1				
36	5UG–26331–00	CABLE, STARTER 1	1	1				
37	JN6–F6333–10	NUT	1	1				
38	5UG–F6372–00	COVER, HANDLE LEVER 1	1	1				
39	5UG–G5158–00	PLATE, SPLASH	1	1				
40	90269–06800	RIVET	2	2				

FIG. 39 REAR MASTER CYLINDER

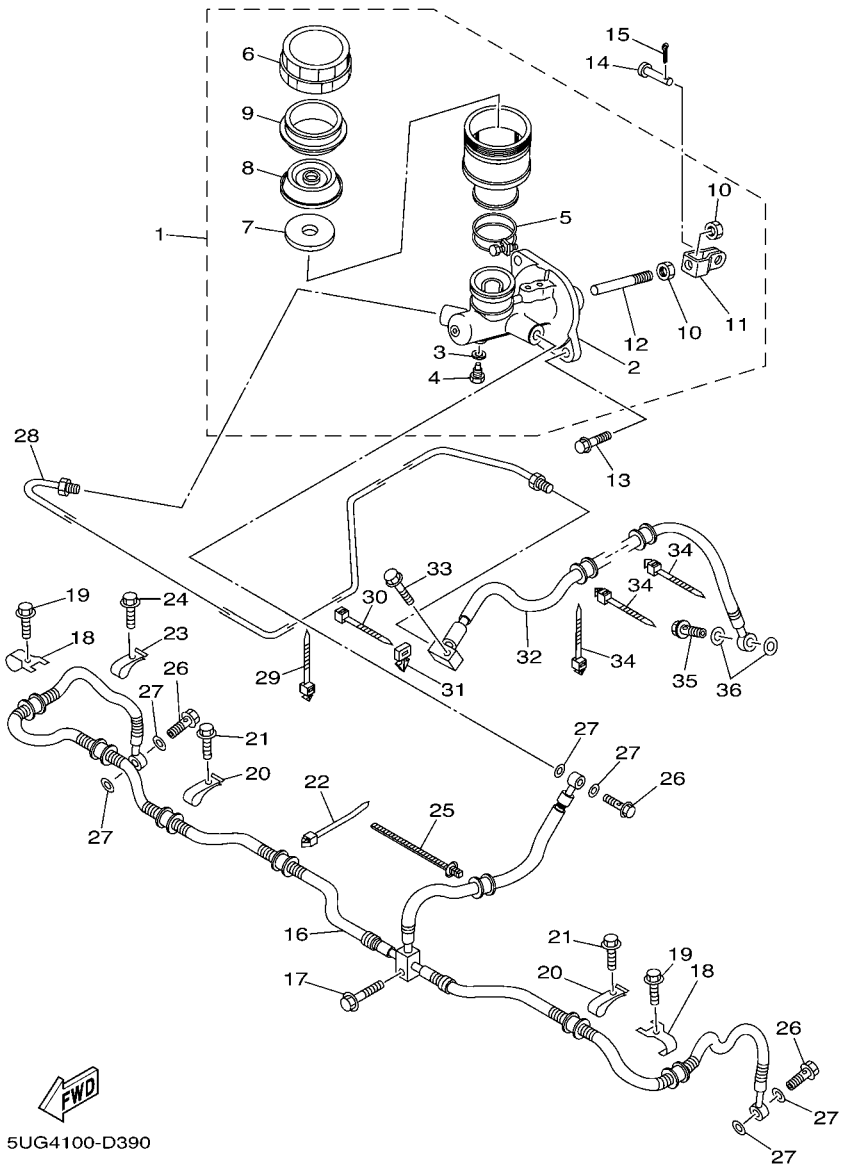

REF. NO.	PART NO.	DESCRIPTION	USA	CAN				REMARKS
1	5UG–2583T–00	MASTER CYLINDER ASSY	1	1				
2	5UG–W0042–00	.CYLINDER KIT, MASTER	1	1				
3	5UG–25878–00	.WASHER, OIL BOLT	1	1				
4	5UG–25877–00	.BOLT, OIL 1	1	1				
5	5UG–25719–00	.BAND	1	1				
6	5UG–25852–00	.CAP, RESERVOIR	1	1				
7	5UG–25853–00	.FLOAT, RESERVOIR	1	1				
8	5UG–25854–00	.DIAPHRAGM, RESERVOIR	1	1				
9	5UG–25855–00	.BUSH,DIAPHRAGM	1	1				
10	4SS–27218–00	.NUT	2	2				
11	2YK–27222–00	.JOINT	1	1				
12	5UG–25880–00	.PUSH ROD COMP.	1	1				
13	90105–081A7	BOLT, FLANGE	2	2				
14	90240–08124	PIN, CLEVIS	1	1				
15	91401–20020	PIN, COTTER	1	1				
16	5UG–F5872–01	HOSE, BRAKE 1	1	1				
17	95827–06025	BOLT, FLANGE	1	1				
18	5ND–F5875–00	HOLDER, BRAKE HOSE 1	2	2				
19	95827–06012	BOLT, FLANGE	2	2				
20	5UG–F3192–00	BAND	2	2				
21	95827–06016	BOLT, FLANGE	2	2				
22	90464–31827	CLAMP	1	1				
23	5UG–F3192–00	BAND	1	1				
24	95827–06016	BOLT, FLANGE	1	1				
25	90464–20005	CLAMP	1	1				
26	90401–10159	BOLT, UNION	3	3				
27	90201–10118	WASHER, PLATE	6	6				

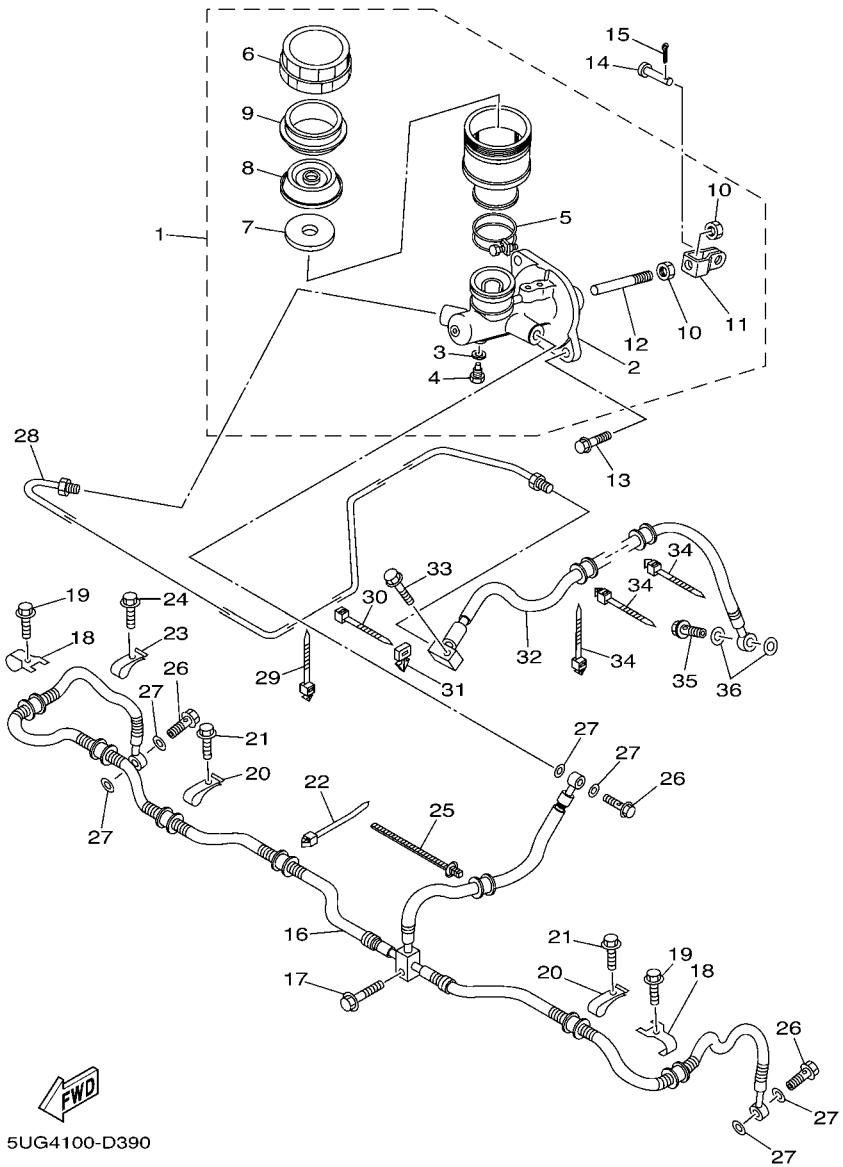

FIG. 39 REAR MASTER CYLINDER

REF. NO.	PART NO.	DESCRIPTION	USA	CAN				REMARKS
28	5UG–F5871–00	PIPE, BRAKE	1	1				
29	90464–20005	CLAMP	1	1				
30	90464–31827	CLAMP	1	1				
31	5UG–F2465–00	HOLDER	1	1				
32	5UG–F5873–01	HOSE, BRAKE 2	1	1				
33	90105–06833	BOLT, FLANGE	1	1				
34	90464–20005	CLAMP	3	3				
35	90401–10159	BOLT, UNION	1	1				
36	90201–10118	WASHER, PLATE	2	2				

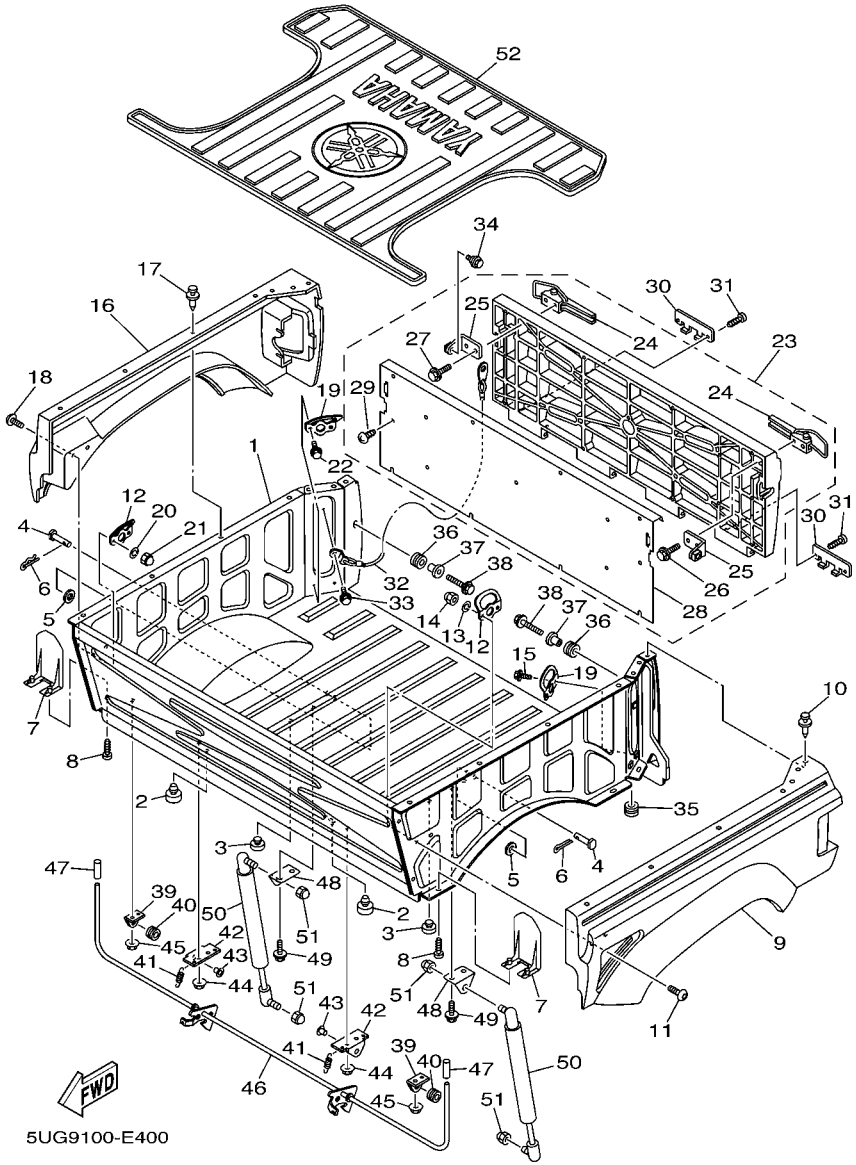

FIG. 40 CARRIER

REF. NO.	PART NO.	DESCRIPTION	USA	CAN				REMARKS
1	2P5–F4850–00	CARRIER BOX ASSY	1	1				
2	4X4–27114–00	STOPPER, MAIN STAND	2	2				
3	128–27114–00	STOPPER, MAIN STAND	2	2				
4	90240–12002	PIN, CLEVIS	2	2				
5	90201–127J6	WASHER, PLATE	2	2				
6	91401–30025	PIN, SPLIT	2	2				
7	2P5–F6123–00	GUARD, LEVER	2	2				
8	90167–06800	SCREW, TAPPING	2	2				
9	5UG–K8191–00	PANEL, REAR FENDER 1	1	1				
10	90269–06800	RIVET	8	8				
11	90110–06200	BOLT, HEXAGON SOCKET HEAD	2	2				
12	5UG–F4867–00	HOOK	2	2				
13	92907–06100	WASHER, SPRING	2	2				
14	95307–06800	NUT	2	2				
15	95817–06016	BOLT, FLANGE	2	2				
16	5UG–K8192–10	PANEL, REAR FENDER 2	1	1				
17	90269–06800	RIVET	8	8				
18	90110–06200	BOLT, HEXAGON SOCKET HEAD	2	2				
19	5UG–F4867–00	HOOK	2	2				
20	92907–06100	WASHER, SPRING	2	2				
21	95307–06800	NUT	2	2				
22	95817–06016	BOLT, FLANGE	2	2				
23	5UG–K810N–10	REAR STORAGE LID COMP.	1	1				
24	5UG–F389E–00	.LATCH	2	2				
25	5UG–F849R–00	.BRACKET,TRANK STOPPER	2	2				
26	95827–06025	.BOLT, FLANGE	2	2				
27	95827–06025	.BOLT, FLANGE	2	2				

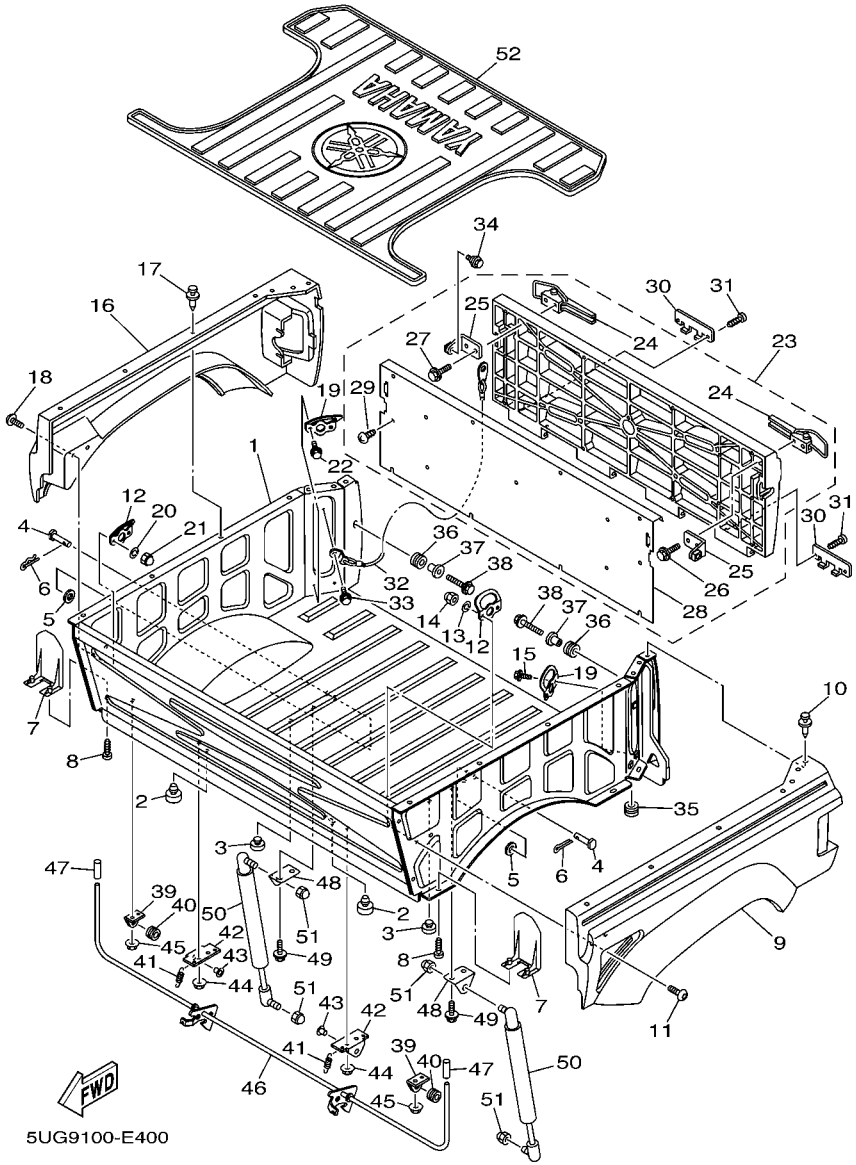

FIG. 40 CARRIER

REF. NO.	PART NO.	DESCRIPTION	USA	CAN				REMARKS
28	5UG–K8365–00	.CASE	1	1				
29	90167–05030	.SCREW, TAPPING	15	15				
30	5UG–F4669–00	COVER, HINGE	2	2				
31	90167–05025	SCREW, TAPPING	4	4				
32	5UG–K7195–01	HOLDER, CABLE	2	2				
33	95817–06016	BOLT, FLANGE	2	2				
34	90109–060F3	BOLT	2	2				
35	90480–15235	GROMMET	2	2				
36	90480–18290	GROMMET	2	2				
37	90387–066J1	COLLAR	2	2				
38	95827–06025	BOLT, FLANGE	2	2				
39	2P5–K7175–00	HOLDER, LATCH	2	2				
40	90480–15235	GROMMET	2	2				
41	90506–16451	SPRING, TENSION	2	2				
42	2P5–K7185–00	PLATE 1	2	2				
43	2P5–K7515–00	BUSH, RUBBER 1	2	2				
44	95707–08500	NUT, FLANGE	6	6				
45	95707–06500	NUT, FLANGE	2	2				
46	2P5–K7180–00	LATCH ASSY	1	1				
47	JJ3–K818M–00	CAP, PROTECTOR END 4	2	2				
48	5UG–F1798–10	BRACKET, DAMPER	2	2				
49	90105–06831	BOLT, FLANGE	4	4				
50	5UG–F8415–00	DAMPER 1	2	2				
51	95607–08200	NUT, SELF-LOCKING	4	4				
52	5UG–F483J–00	MAT	1	1				

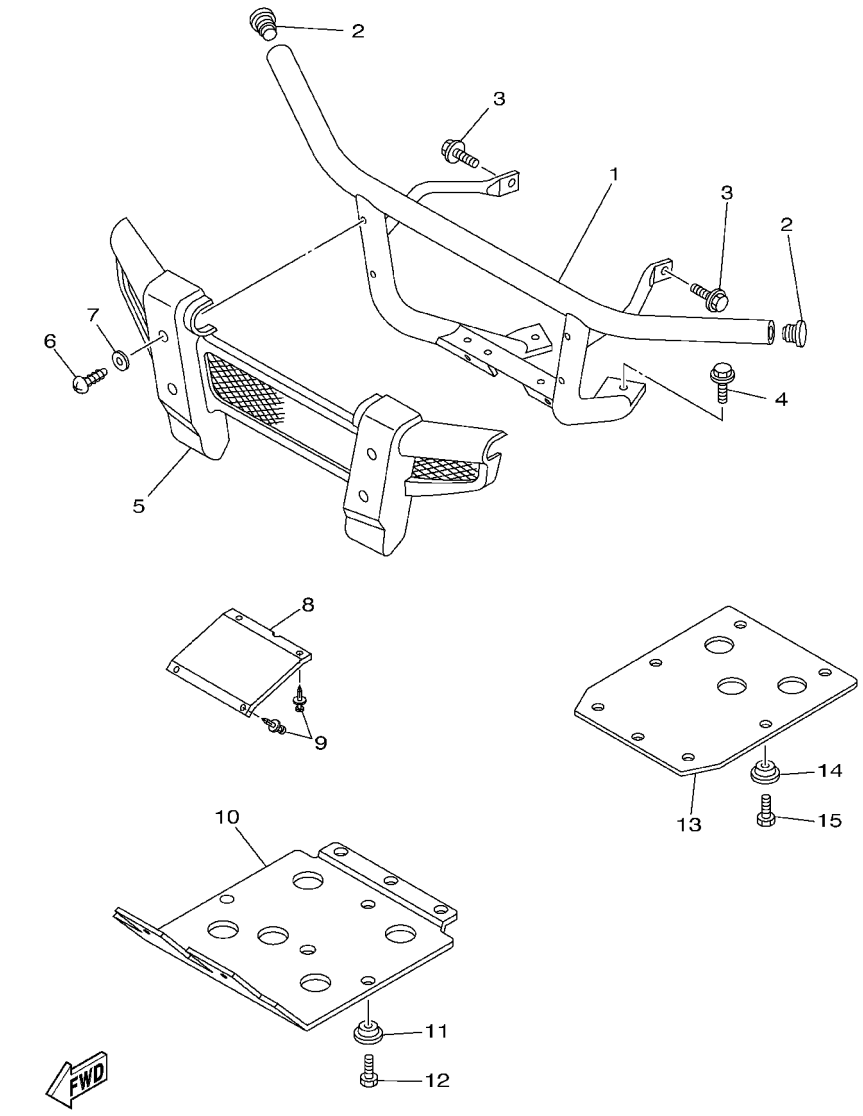

5UG9100E4101

FIG. 41 GUARD

REF. NO.	PART NO.	DESCRIPTION	USA	CAN				REMARKS
1	2P5–F845N–00	BAR, CARRY FRONT	1	1				
2	5UG–F2417–00	PLUG	2	2				
3	95817–10020	BOLT, FLANGE	2	2				
4	9581P–12025	BOLT, FLANGE	2	2				
5	5UG–F842A–00	COVER 5	1	1				
6	95817–06016	BOLT, FLANGE	4	4				
7	90201–06055	WASHER, PLATE	4	4				
8	5UG–F835L–00	COVER, COOLER	1	1				
9	90269–06800	RIVET	4	4				
10	2P5–F8385–00	COVER, LOWER	1	1				
11	5UG–F8329–00	SPACER	7	7				
12	90105–06832	BOLT, FLANGE	7	7				
13	5UG–F8395–00	COVER, UNDER	1	1				
14	5UG–F8329–00	SPACER	7	7				
15	90105–06832	BOLT, FLANGE	7	7				

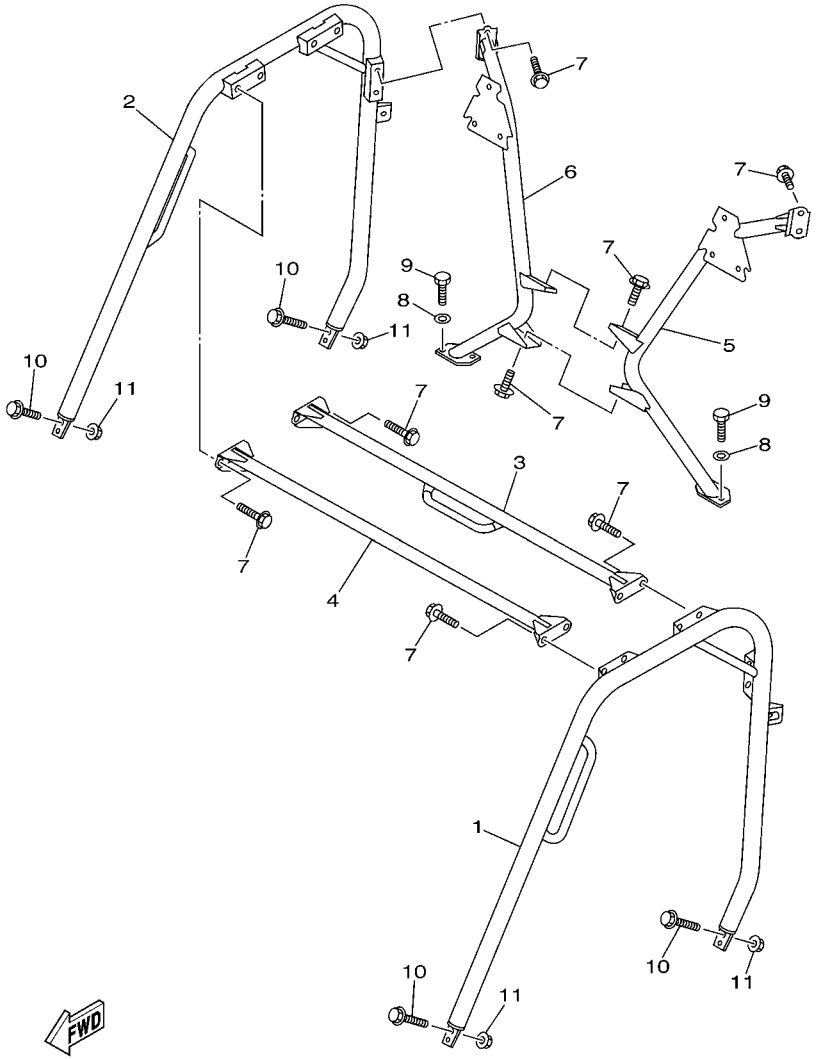

5UG1110-C420

FIG. 42 GUARD 2

REF. NO.	PART NO.	DESCRIPTION	USA	CAN				REMARKS
1	5UG–K831A–10	SUPPORT, ROOF 3	1	1				
2	5UG–K831E–10	SUPPORT, ROOF 4	1	1				
3	5UG–K8336–01	MEMBER, CROSS ROOF	1	1				
4	5UG–K8392–01	MEMBER, ROOF FRAME	1	1				
5	5UG–K8393–20	MEMBER, ROOF FRAME 2	1	1				
6	5UG–K8394–20	MEMBER, ROOF FRAME 3	1	1				
7	95817–10020	BOLT, FLANGE	16	16				
8	90201–10774	WASHER, PLATE	4	4				
9	97017–10025	BOLT	4	4				
10	95817–10045	BOLT, FLANGE	8	8				
11	9560P–10200	NUT, FLANGE	8	8				

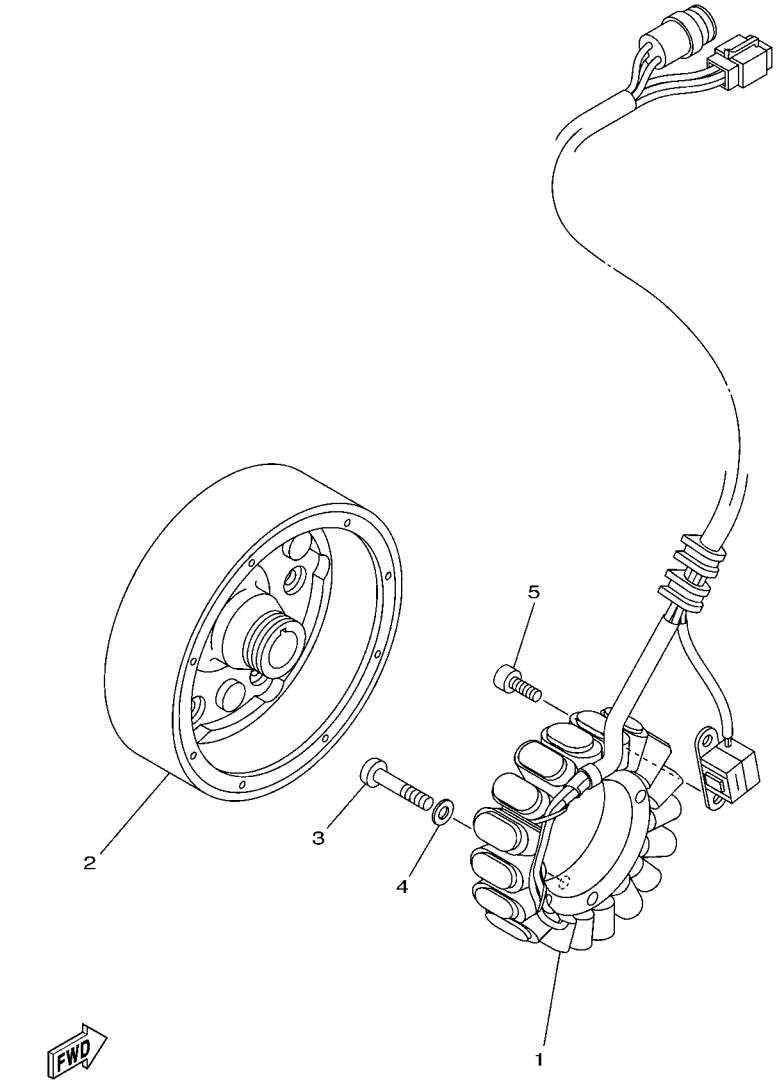

5UG1110-C430

FIG. 43 GENERATOR

REF. NO.	PART NO.	DESCRIPTION	USA	CAN				REMARKS
1	5KM–81410–00	STATOR ASSY	1	1				
2	5KM–81450–11	ROTOR ASSY	1	1				
3	98507–06030	SCREW, PAN HEAD	3	3				
4	92907–06600	WASHER, PLATE	3	3				
5	91317–05012	BOLT	2	2				

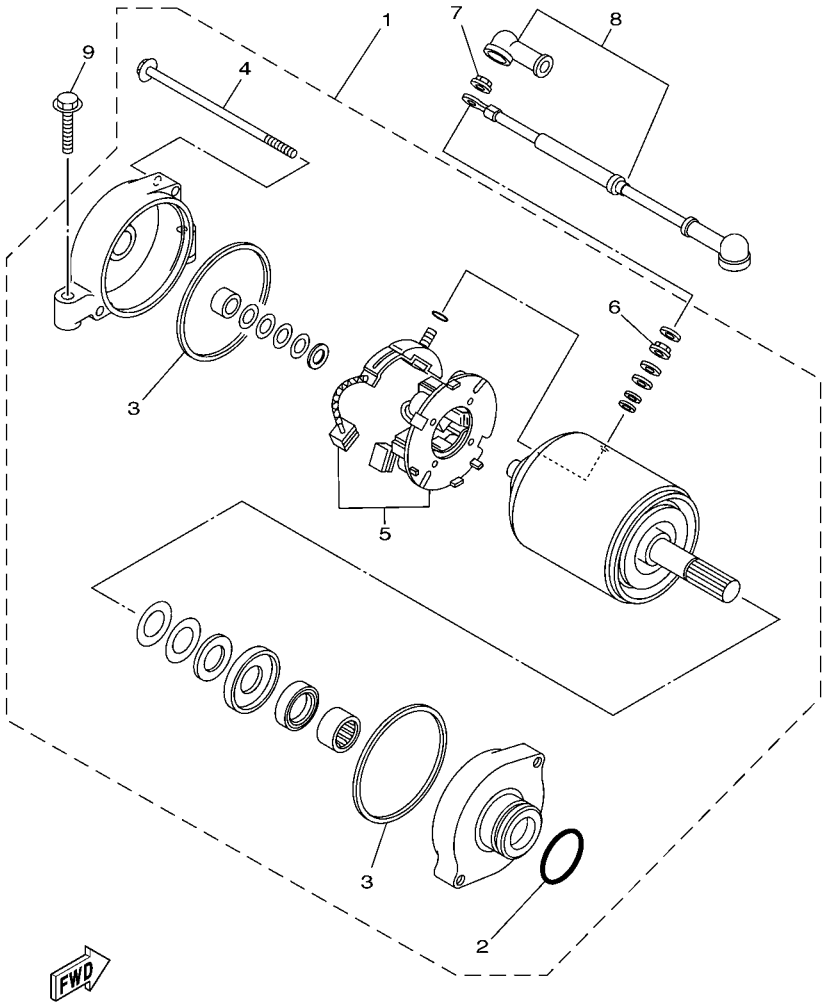

5UG1110-C440

FIG. 44 STARTING MOTOR

REF. NO.	PART NO.	DESCRIPTION	USA	CAN				REMARKS
1	5KM–81890–00	MOTOR ASSY	1	1				
2	1FK–81847–00	.O-RING	1	1				
3	11H–81844–00	.GASKET	2	2				
4	3AJ–81826–00	.BOLT	2	2				
5	3AJ–81801–00	.BRUSH SET	1	1				
6	4XV–8182A–00	.NUT	1	1				
7	4XV–8182A–00	NUT	1	1				
8	5UG–H1815–01	CORD, STARTER MOTOR	1	1				
9	95027–06030	BOLT, FLANGE	2	2				

FIG. 45 METER

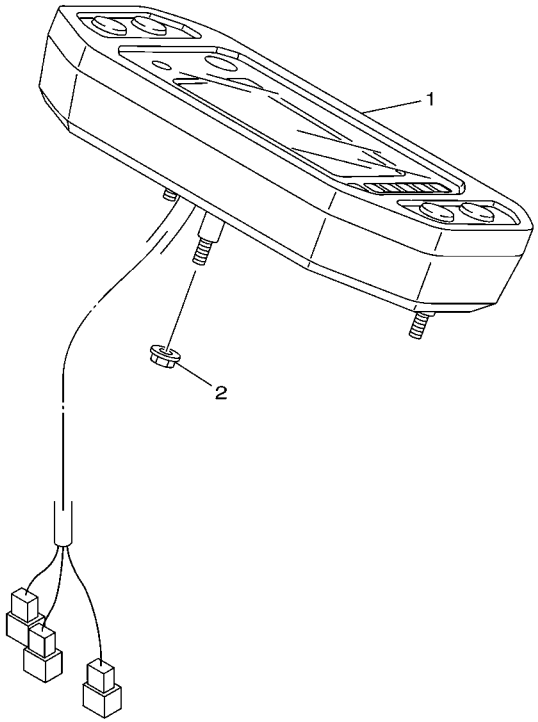

5KM9100-B440

REF. NO.	PART NO.	DESCRIPTION	USA	CAN				REMARKS
1	5UG–83500–10	SPEEDOMETER ASSY		1				
2	95707–05500	NUT, FLANGE		3				

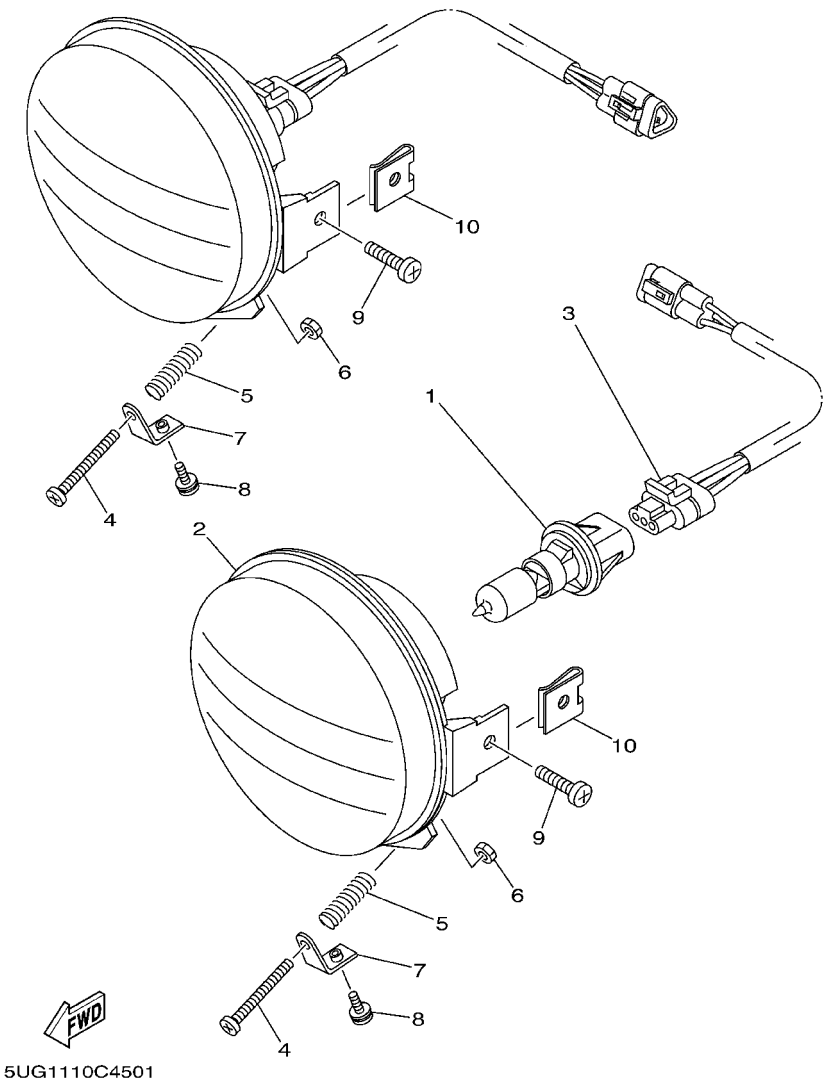

FIG. 46 HEADLIGHT

REF. NO.	PART NO.	DESCRIPTION	USA	CAN				REMARKS
1	5FU–H4314–10	BULB, HEADLIGHT (12V-30/30W)	2	2				Go To P/N : PE0-MC-080041
2	5FU–H4320–10	LENS ASSY	2	2				
3	5FU–H4340–10	SOCKET CORD ASSY 1	2	2				
4	98507–03540	SCREW, PAN HEAD	2	2				
5	2GU–84332–00	SPRING, SCREW	2	2				
6	2GU–84334–00	NUT, ADJUSTING	2	2				
7	5KM–84703–00	BRACKET	2	2				
8	90159–05022	SCREW, WITH WASHER	2	2				
9	90150–05802	SCREW, ROUND HEAD	4	4				
10	90183–05008	NUT, SPRING	4	4				

PARTS NEWS

YAMAHA
YAMAHA MOTOR CO., LTD.
2500 SHINGAI IWATA SHIZUOKA JAPAN

Date: July, 4., 2008

News No. PE0-MC-080041

Signature: K. Otsuka

Cause ☑ Revision Notice ☐ Correction ☐ Sales Unit Change ☐ Others

Model	See the"List of Models and CATALOGUE No's below."
Subject	PARTS CATALOGUE CORRECTIONS
CATALOGUE NO.	See the"List of Models and CATALOGUE No's below."

Time of YPEC Revision Text, Illustration --> Jul./22/2008 PDF Replace --> Jul./22/2008

(YPEC = Yamaha Parts Electrical Catalogue = Website parts catalogue)

1. ILLUSTRATION CORRECTION

FIG.45 or 46 HEADLIGHT SECTION

(OLD) **(NEW)**

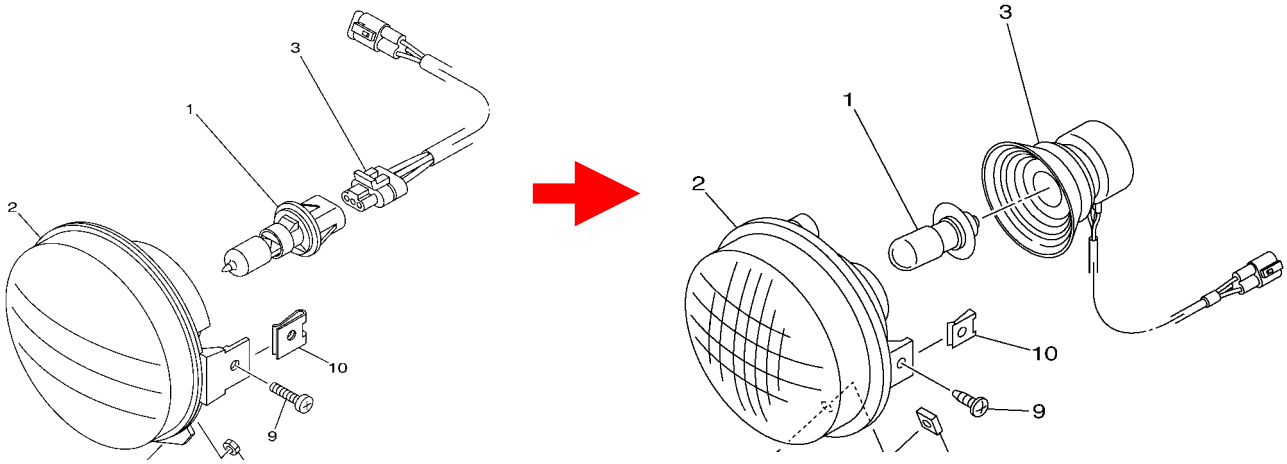

2. LIST CORRECTION

FIG.45 or 46 HEADLIGHT SECTION

Ref.No.	OLD PART No.	**NEW PART No.**	PART NAME	Q'TY	INTERCHANGE ABILITY	REMARKS
1	5FU-H4314-10	**4KB-84314-01**	BULB, HEADLIGHT(12V-30/30W)	2	○	**Illustration & Part number revision**
2	5FU-H4320-10	**5KM-84320-01**	LENS ASSY	2	○	
3	5FU-H4340-10	**5EH-84340-00**	SOCKET CORD ASSY 1	2	○	

* The parts marked with ○—○ indicates interchangeability with a set.

3. LIST of Models and CATALOGUE No's.

The applicable MODELS, MODEL CODES, and CATALOGUE No's are as follows.

MODEL YEAR	MODEL NAME	MODEL CODE	CATALOGUE NO.
2006	YXR66FAV	5UG9/ 5UGA	1E5UG-100E1
2006	YXR66FAV	5UGD/ 5UGE	1E5UG-300E1
2006	YXR66FAV	5UGF/ 5UGG/ 5UGH	1E5UG-100EK
2006	YXR45FAV	2P57	1F2P5-110E1

Thank you very much for your cooperation.

Parts Manager Check	Service Manager Check	Parts Manager File	YAMAHA MOTOR CO.,LTD 2500 Shingai Iwata Shizuoka 438-8501.Japan Technical Publication Dept.

YAMAHA GENUINE Parts & Accessories

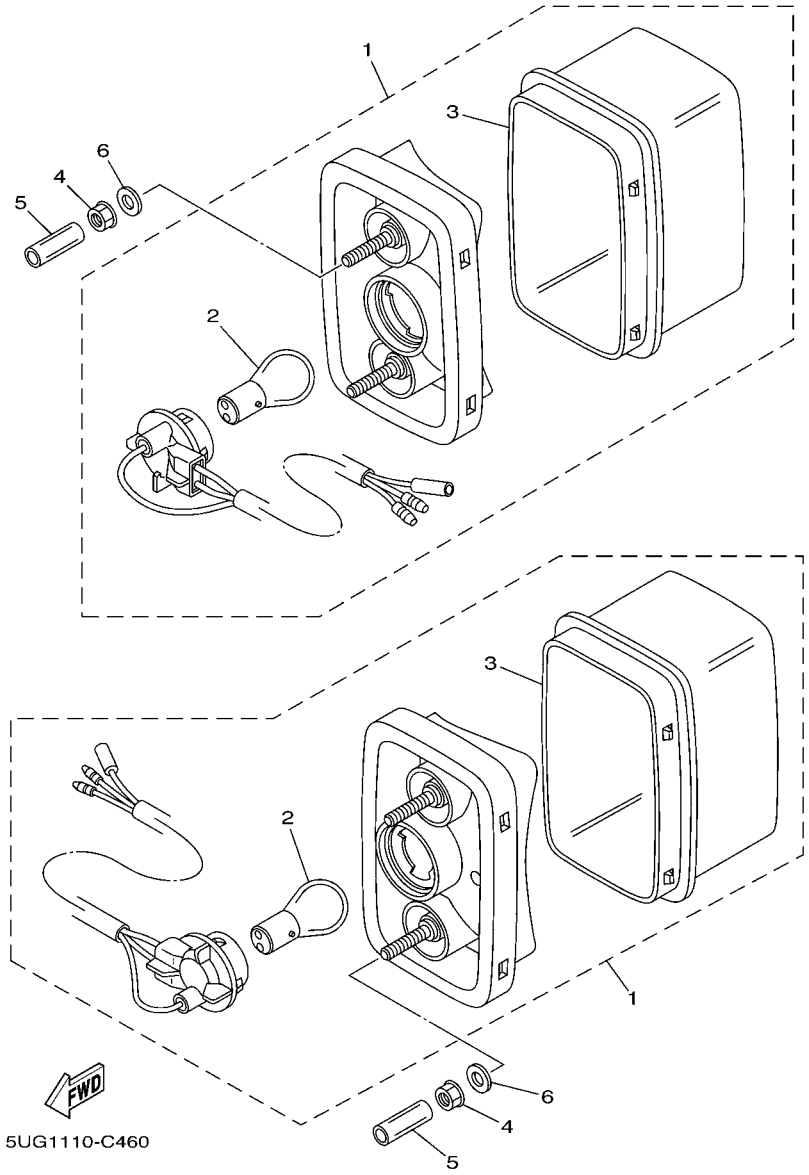

FIG. 47 TAILLIGHT

REF. NO.	PART NO.	DESCRIPTION	USA	CAN				REMARKS
1	5KM–84710–00	TAILLIGHT UNIT ASSY	2	2				
2	1A2–84714–41	.BULB (12V-21/5W)	1	1				
3	5KM–8472C–10	.LENS, TAILLIGHT	1	1				
4	95707–06300	NUT, FLANGE	4	4				
5	90445–09220	HOSE (L30)	4	4				
6	90201–06074	WASHER, PLATE	4	4				

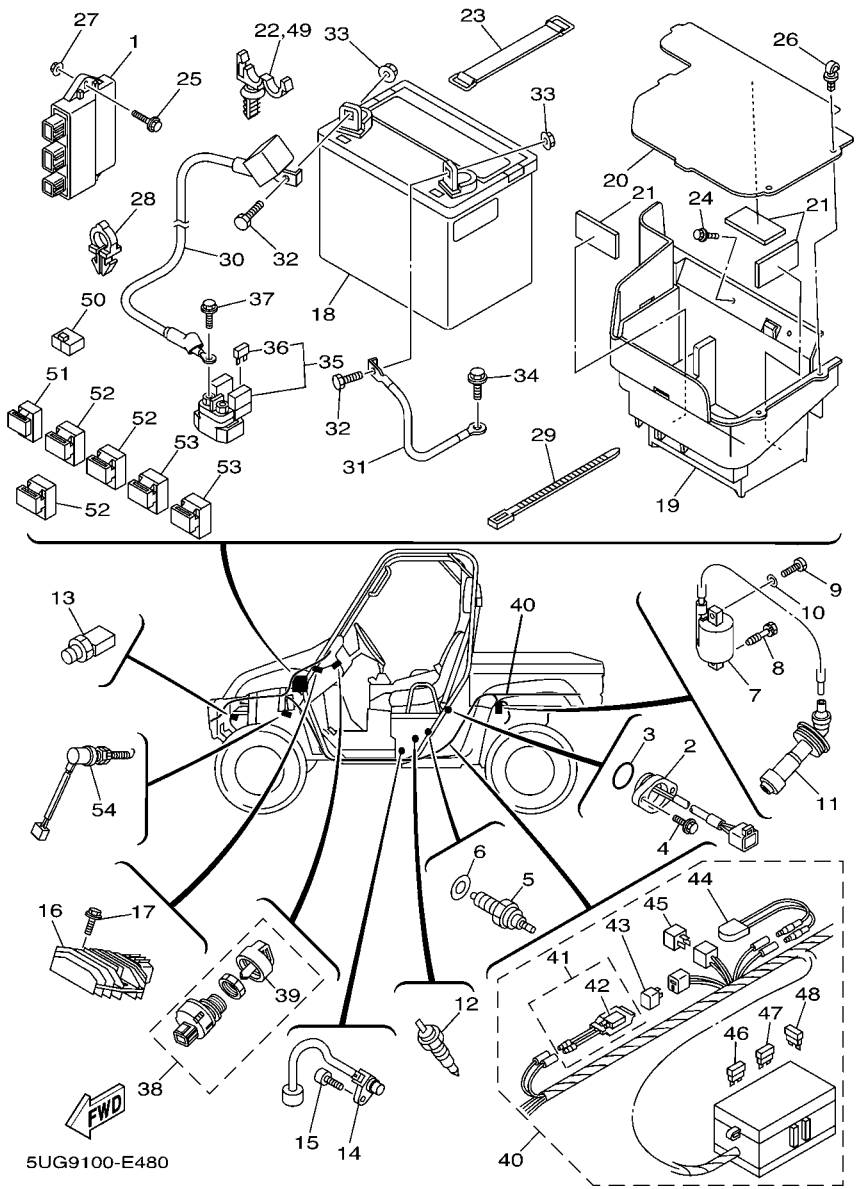

FIG. 48 ELECTRICAL 1

REF. NO.	PART NO.	DESCRIPTION	USA	CAN				REMARKS
1	5UG–85540–10	C.D.I. UNIT ASSY	1	1				
2	5KM–82540–00	NEUTRAL SWITCH ASSY	1	1				
3	93210–29196	O-RING	1	1				
4	90119–06044	BOLT, WITH WASHER	2	2				
5	3GB–82540–01	NEUTRAL SWITCH ASSY	1	1				
6	90430–10148	GASKET	1	1				
7	5FU–82310–00	IGNITION COIL ASSY	1	1				
8	90109–06723	BOLT	1	1				
9	97007–06020	BOLT	1	1				
10	92907–06600	WASHER, PLATE	1	1				
11	3YF–82370–00	PLUG CAP ASSY	1	1				
12	4BA–82560–00	THERMO SWITCH ASSY	1					UR
	5KM–82560–00	THERMO SWITCH ASSY	1	1				UR FOR METER
13	5GM–82560–00	THERMO SWITCH ASSY	1	1				
14	5UG–83755–10	SENSOR, SPEED	1	1				
15	91317–06016	BOLT	1	1				
16	5BN–81960–00	RECTIFIER & REGULATOR ASSY	1	1				
17	90105–06833	BOLT, FLANGE	2	2				
18	5UG–H2100–00	BATTERY ASSY (GS U1L-11)	1	1				
19	5UG–H212B–02	BOX, BATTERY 1	1	1				
20	5UG–H2129–10	COVER, BATTERY	1	1				
21	4XE–F4145–00	DAMPER, SIDE COVER	3	3				
22	90464–12830	CLAMP	1	1				
23	3L8–82131–01	BAND, BATTERY	1	1				
24	90119–06868	BOLT, WITH WASHER	4	4				
25	9581P–06025	BOLT, FLANGE	1	1				
26	5UG–F171S–00	RIVET	2	2				

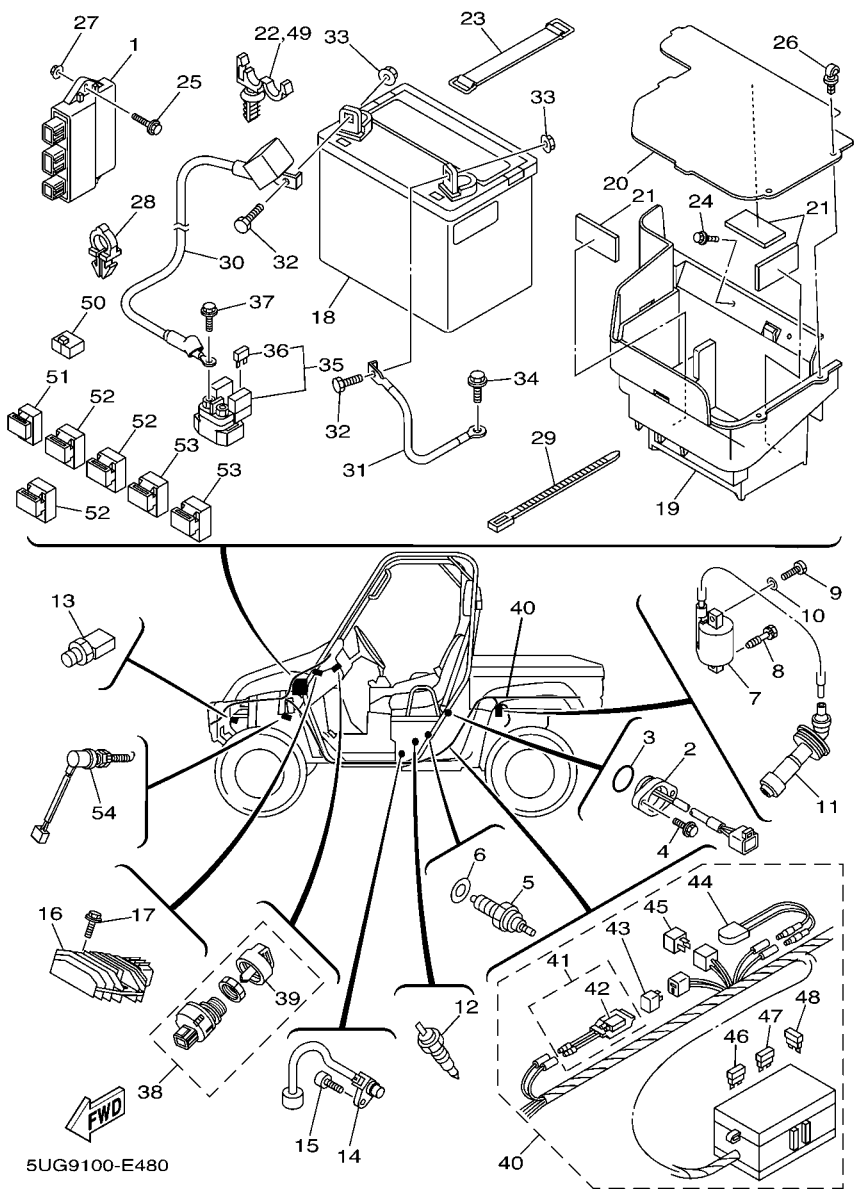

FIG. 48 ELECTRICAL 1

REF. NO.	PART NO.	DESCRIPTION	USA	CAN				REMARKS
27	95707–06600	NUT, FLANGE	1	1				
28	90464–10833	CLAMP	1	1				
29	90464–31827	CLAMP	1	1				
30	5UG–H2115–00	WIRE, PLUS LEAD	1	1				
31	5UG–H2116–00	WIRE, MINUS LEAD	1	1				
32	97017–06020	BOLT	2	2				
33	95707–06500	NUT, FLANGE	2	2				
34	95827–06014	BOLT, FLANGE	1	1				
35	4SV–81940–12	STARTER RELAY ASSY	1	1				
36	1AE–82151–00	.FUSE (30A-BL)	2	2				
37	95027–06008	BOLT, FLANGE	2	2				
38	5UG–H2510–00	MAIN SWITCH ASSY	1	1				
39	5UG–H2579–00	.CAP, KEY	1	1				
40	5UG–82590–30	WIRE HARNESS ASSY	1					
	5UG–82590–40	WIRE HARNESS ASSY		1				
41	5ND–82180–00	.CIRCUIT BREAKER ASSY	1	1				
42	5ND–82560–00	..THERMO SWITCH ASSY	1	1				
43	3WP–81980–00	.DIODE ASSY	1	1				
44	5FU–82560–10	.THERMO SWITCH ASSY	1	1				
45	3XV–81980–00	.DIODE ASSY	1	1				
46	5JJ–82151–10	.FUSE (15A-BL)	2	2				
47	5JJ–82151–30	.FUSE (10A-BL)	6	6				
48	5JJ–82151–50	.FUSE (3A-BL)	2	2				
49	90464–12830	CLAMP	1	1				
50	5UG–82529–00	CONNECTOR		2				
51	29U–81950–93	RELAY ASSY	1	1				
52	5DM–81950–00	RELAY ASSY (G8HN-1C4T-DJ-Y52)	3	3				

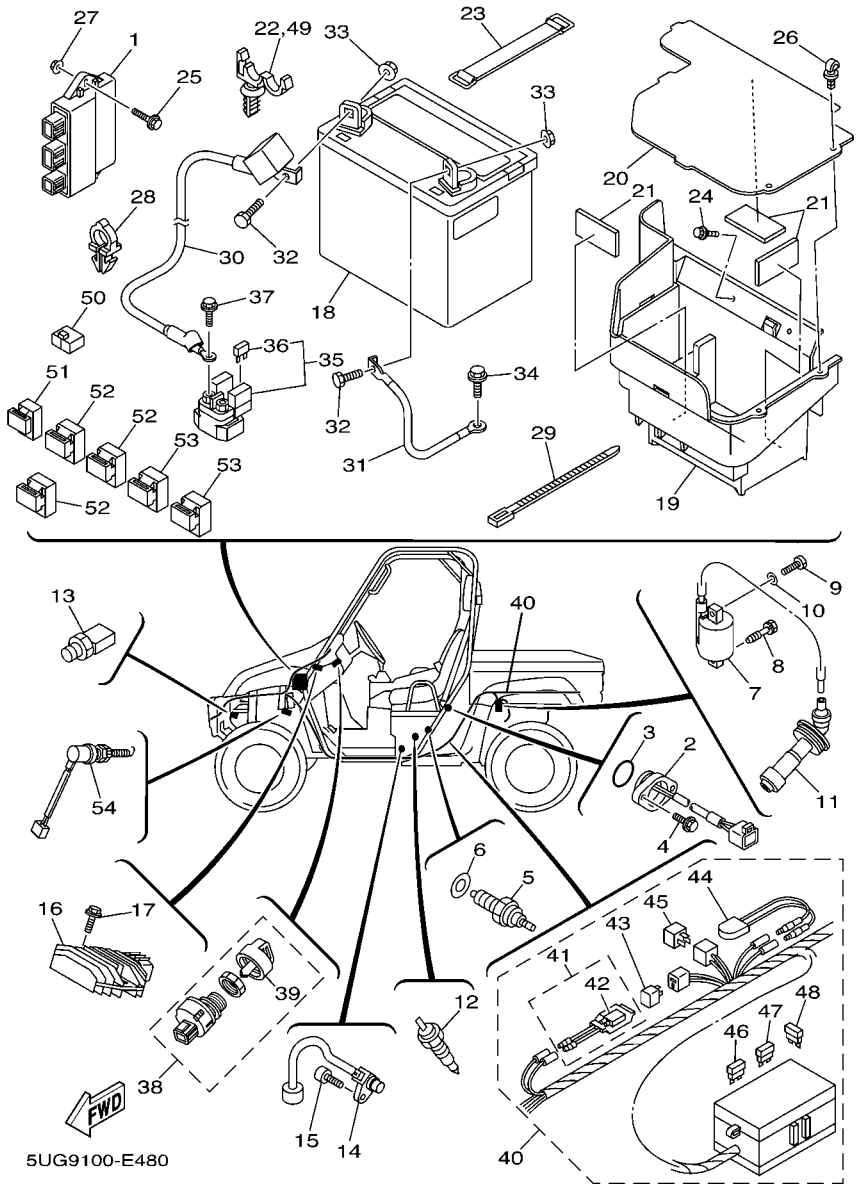

FIG. 48 ELECTRICAL 1

REF. NO.	PART NO.	DESCRIPTION	USA	CAN				REMARKS
53	1UY–81950–92	RELAY ASSY	2					
54	4KB–82530–10	STOP SWITCH ASSY	1	1				

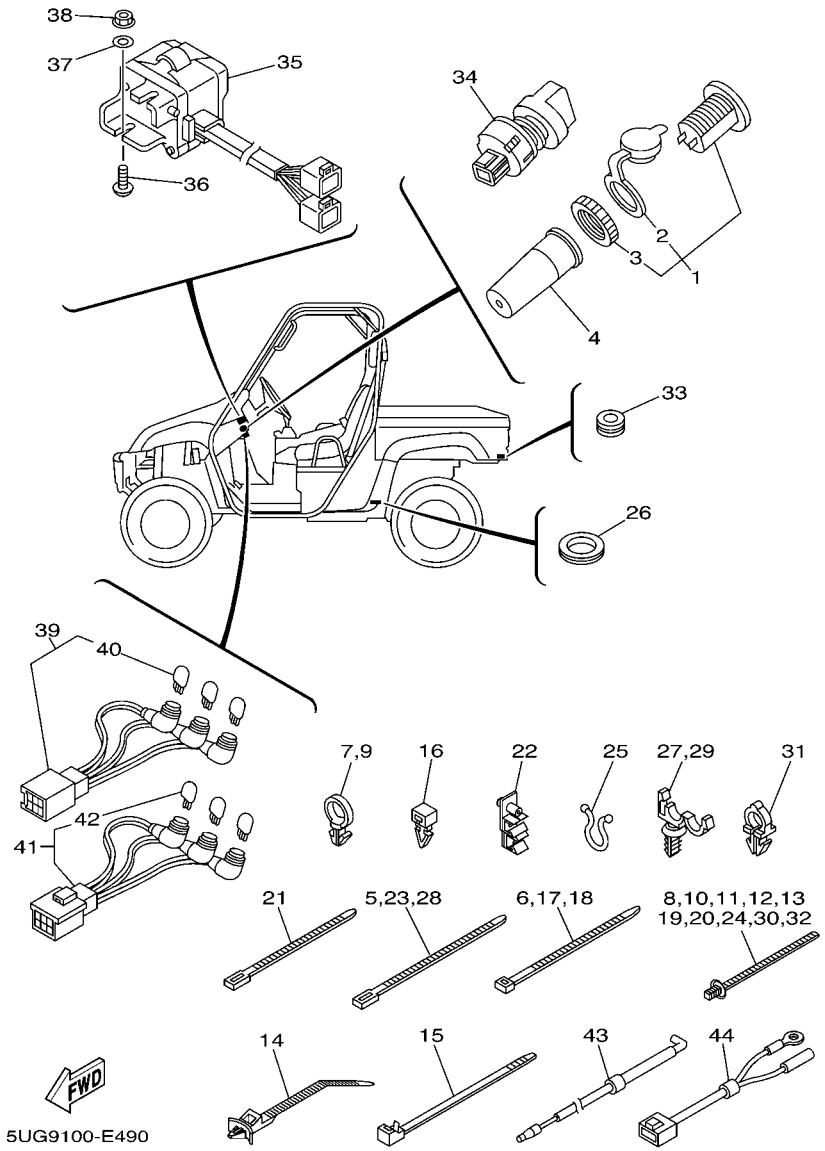

FIG. 49 ELECTRICAL 2

REF. NO.	PART NO.	DESCRIPTION	USA	CAN				REMARKS
1	5FU–H1920–10	TERMINAL ASSY	1	1				
2	5FU–H1942–10	.COVER	1	1				
3	5FU–H191B–10	.NUT	1	1				
4	5FU–H2599–01	COVER, CONNECTER	1	1				
5	90464–40825	CLAMP	4	4				
6	90464–48800	CLAMP	1	1				
7	90464–19815	CLAMP	1	1				
8	90464–20005	CLAMP	1	1				
9	90464–19815	CLAMP	2	2				
10	90464–20005	CLAMP	3	3				
11	90464–20005	CLAMP	3	3				
12	90464–20005	CLAMP	1	1				
13	90464–20005	CLAMP	1	1				
14	90464–38800	CLAMP	1	1				
15	90464–51800	CLAMP	2	2				
16	5UG–F2465–00	HOLDER	1	1				
17	90464–48800	CLAMP	1	1				
18	90464–48800	CLAMP	1	1				
19	90464–20005	CLAMP	2	2				
20	90464–20005	CLAMP	2	2				
21	90464–31827	CLAMP	2	2				
22	5UG–F481H–00	CLAMP	2	2				
23	90464–40825	CLAMP	1	1				
24	90464–20005	CLAMP	3	3				
25	90464–20804	CLAMP	1	1				
26	90480–25856	GROMMET	1	1				
27	90464–12830	CLAMP	2	2				

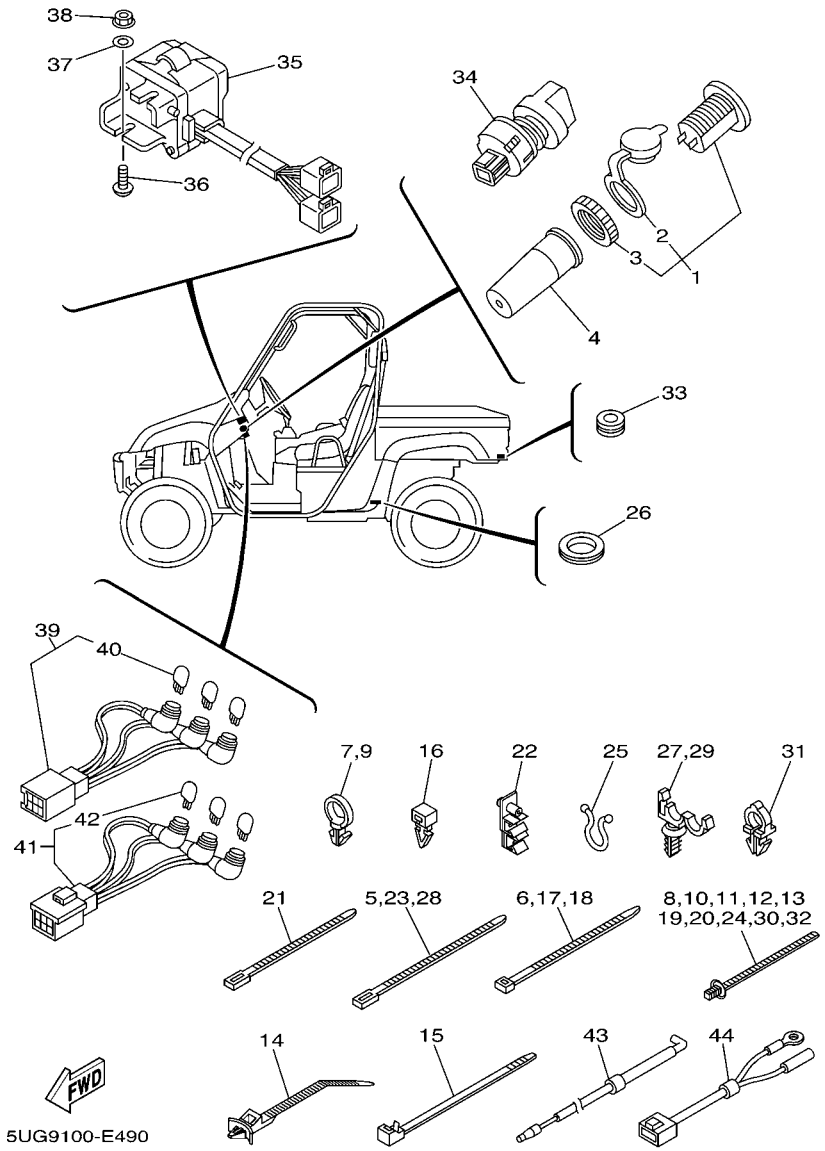

FIG. 49 ELECTRICAL 2

REF. NO.	PART NO.	DESCRIPTION	USA	CAN				REMARKS
28	90464–40825	CLAMP	1	1				
29	90464–12830	CLAMP	4	4				
30	90464–20005	CLAMP	2	2				
31	90464–10833	CLAMP	4	4				
32	90464–20005	CLAMP	4	4				
33	90480–15235	GROMMET	2	2				
34	5UG–H2526–00	SWITCH, LAMP	1	1				
35	5UG–83976–10	SWITCH, HANDLE 1	1	1				
36	90149–05299	SCREW	2	2				
37	90201–05029	WASHER, PLATE	2	2				
38	95707–05300	NUT, FLANGE	2	2				
39	5UG–83530–10	PILOT LIGHT ASSY	1					
40	5GH–83516–00	.BULB (14V-1.7W)	3					
41	5UG–83530–01	PILOT LIGHT ASSY	1					
42	5GH–83516–00	.BULB (14V-1.7W)	3					
43	5KM–82541–00	WIRE, LEAD	1	1				
44	5KM–82509–10	WIRE, SUB LEAD	1	1				

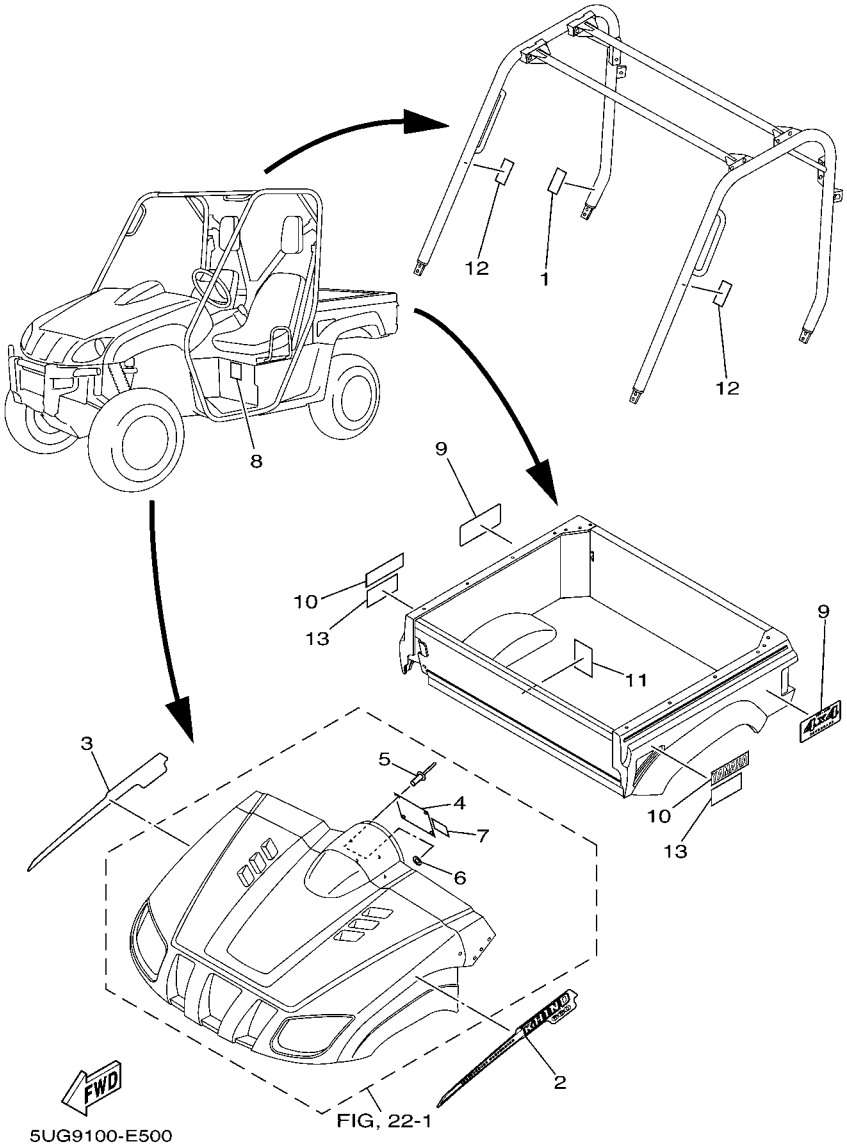

FIG. 50 EMBLEM & LABEL 1

REF. NO.	PART NO.	DESCRIPTION	USA	CAN				REMARKS
1	5UG–2179B–20	PLATE, EPA 3	1					
2	5UG–F1781–40	EMBLEM 1	1					
3	5UG–F1782–40	EMBLEM 2	1					
4	5UG–F1568–01	LABEL, WARNING	1					WITH DOOR->FIG.53
5	4XE–F1539–10	RIVET	4					
6	4XE–F1549–00	WASHER, FENDER MOLD	4					
7	5UG–F1558–00	LABEL, WARNING 2	1					ENGLISH WITH DOOR->FIG.53
8	5UG–F1696–01	LABEL, CAUTION	1					ENGLISH
9	5UG–F163G–40	EMBLEM 1	2					
10	5UG–F153A–20	EMBLEM, YAMAHA	2					
11	5UG–F4897–00	EMBLEM	1					ENGLISH
12	5UG–K8483–00	LABEL WARNING	2					ENGLISH
13	5UG–K7764–00	LABEL, WARNING 4	2					ENGLISH

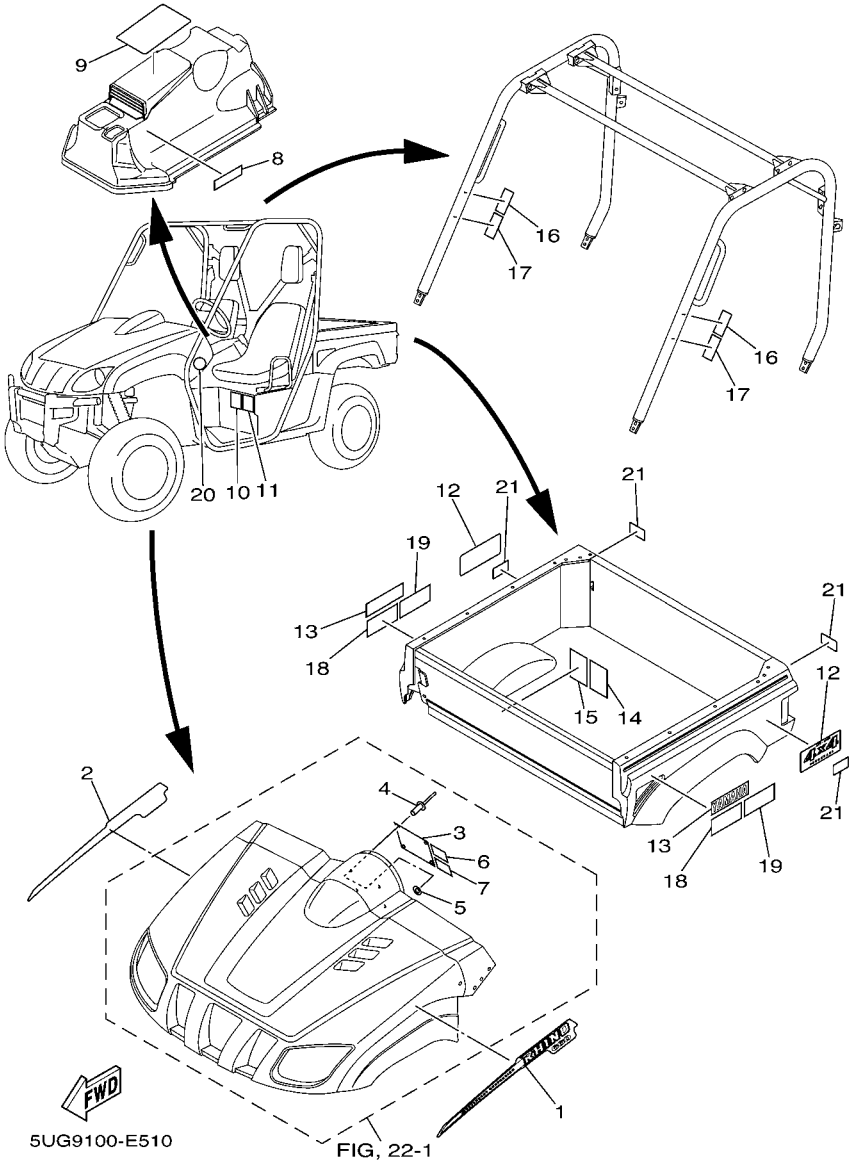

FIG. 51 EMBLEM & LABEL 2

REF. NO.	PART NO.	DESCRIPTION	USA	CAN				REMARKS
1	5UG–F1781–40	EMBLEM 1		1				
2	5UG–F1782–40	EMBLEM 2		1				
3	5UG–F1568–01	LABEL, WARNING		1				WITH DOOR->FIG.53
4	4XE–F1539–10	RIVET		4				
5	4XE–F1549–00	WASHER, FENDER MOLD		4				
6	5UG–F1558–00	LABEL, WARNING 2		1				ENGLISH WITH DOOR->FIG.53
7	5ND–F1558–10	LABEL, WARNING 2		1				FRENCH WITH DOOR->FIG.53
8	5UG–F416E–00	LABEL, CAUTION CANADA		1				
9	5UG–F1568–11	LABEL, WARNING		1				WITH DOOR->FIG.53
10	5UG–F1696–01	LABEL, CAUTION		1				ENGLISH
11	5UG–F1696–10	LABEL, CAUTION		1				FRENCH
12	5UG–F163G–40	EMBLEM 1		2				
13	5UG–F153A–20	EMBLEM, YAMAHA		2				
14	5UG–F4897–00	EMBLEM		1				ENGLISH
15	5UG–F4897–10	EMBLEM		1				FRENCH
16	5UG–K8483–00	LABEL WARNING		2				ENGLISH
17	5UG–K8483–10	LABEL WARNING		2				FRENCH
18	5UG–K7764–00	LABEL, WARNING 4		2				ENGLISH
19	5UG–K7764–10	LABEL, WARNING 4		2				FRENCH
20	5UG–H5111–00	REFLECTOR, FRONT 1		2				
21	5UG–H5131–00	REFLECTOR, REAR 1		4				

FIG. 52 ALTERNATE FOR METER

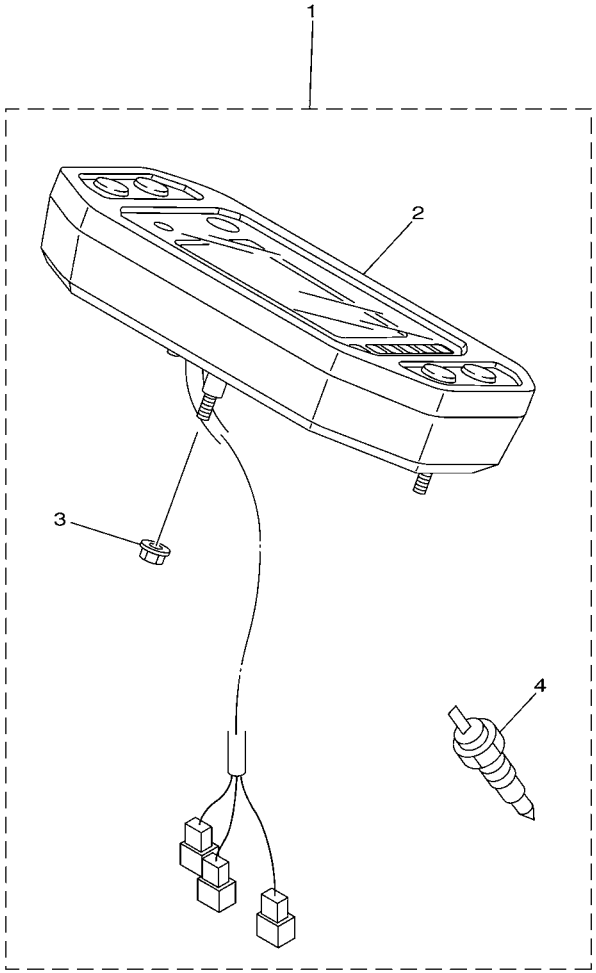

5UG1110-C500

REF. NO.	PART NO.	DESCRIPTION	USA	CAN				REMARKS
1	5UG–W0081–00	SPEEDOMETER KIT	1					AP
2	5UG–83500–00	.SPEEDOMETER ASSY	1					
3	95707–05500	.NUT, FLANGE	3					
4	5KM–82560–00	.THERMO SWITCH ASSY	1					

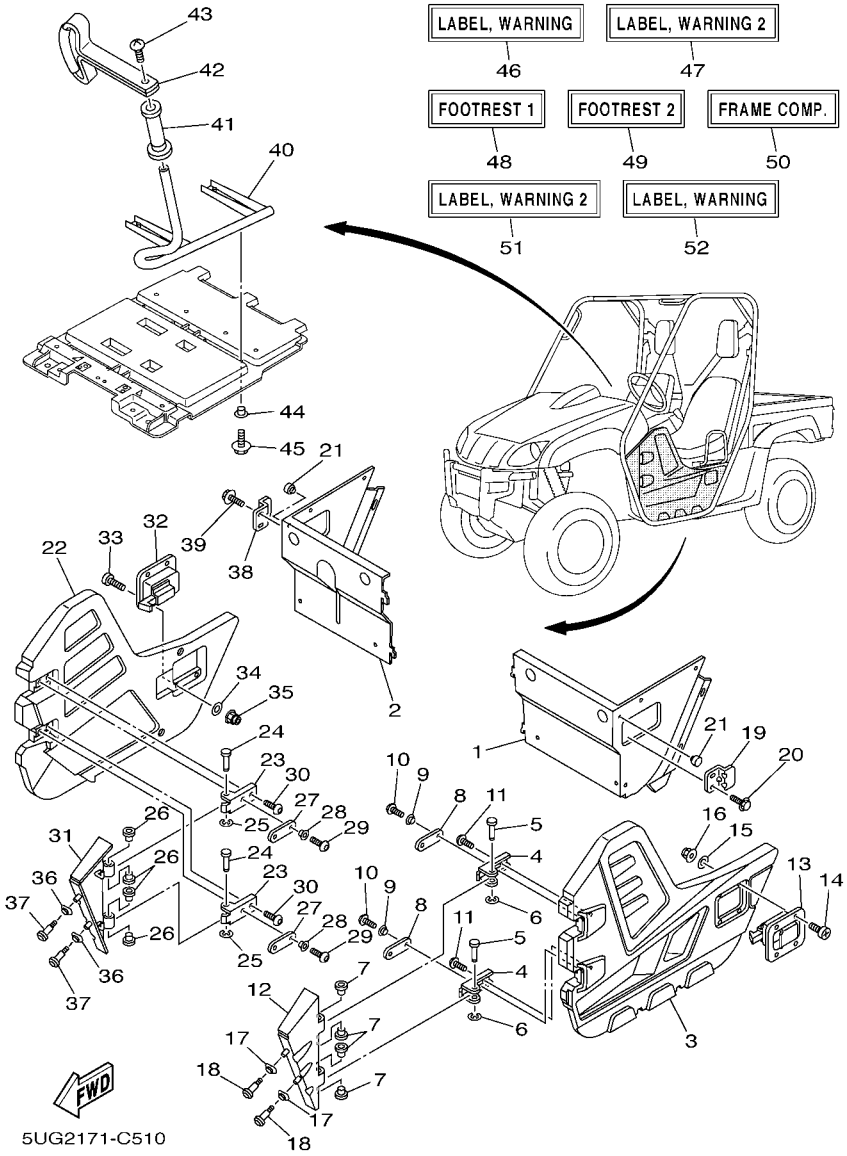

FIG. 53 ALTERNATE 2

REF. NO.	PART NO.	DESCRIPTION	USA	CAN				REMARKS
1	5UG–F254J–11	SUPPORT, SIDE PANEL	1	1				
2	5UG–F254K–11	SUPPORT, SIDE PANEL 2	1	1				
3	5B4–F2864–00	COVER, SIDE 1	1	1				
4	5B4–F1797–00	HINGE	2	2				
5	5B4–F146A–00	PIN 1	2	2				
6	5B4–F3447–00	CLIP	2	2				
7	2P5–K7515–00	BUSH, RUBBER 1	4	4				
8	5B4–F2929–00	BAND, RUBBER	2	2				
9	90387–06089	COLLAR	2	2				
10	5B4–F1739–00	BOLT	2	2				
11	5B4–F1722–00	BOLT 2	2	2				
12	5B4–F197J–00	HINGE 1	1	1				
13	5B4–F389F–00	HANDLE, LATCH	1	1				
14	98907–05020	SCREW, BIND	4	4				
15	5B4–F2149–00	WASHER	4	4				
16	95602–05200	NUT, SELF-LOCKING	4	4				
17	5UG–K7526–00	WASHER 2	2	2				
18	5B4–K7519–00	BOLT	2	2				
19	5B4–F389E–00	LATCH	1	1				
20	5B4–F1738–00	BOLT	2	2				
21	5TG–82121–10	PAD, BATTERY	2	2				
22	5B4–F2868–00	COVER, SIDE 2	1	1				
23	5B4–F1797–00	HINGE	2	2				
24	5B4–F146A–00	PIN 1	2	2				
25	5B4–F3447–00	CLIP	2	2				
26	2P5–K7515–00	BUSH, RUBBER 1	4	4				
27	5B4–F2929–00	BAND, RUBBER	2	2				

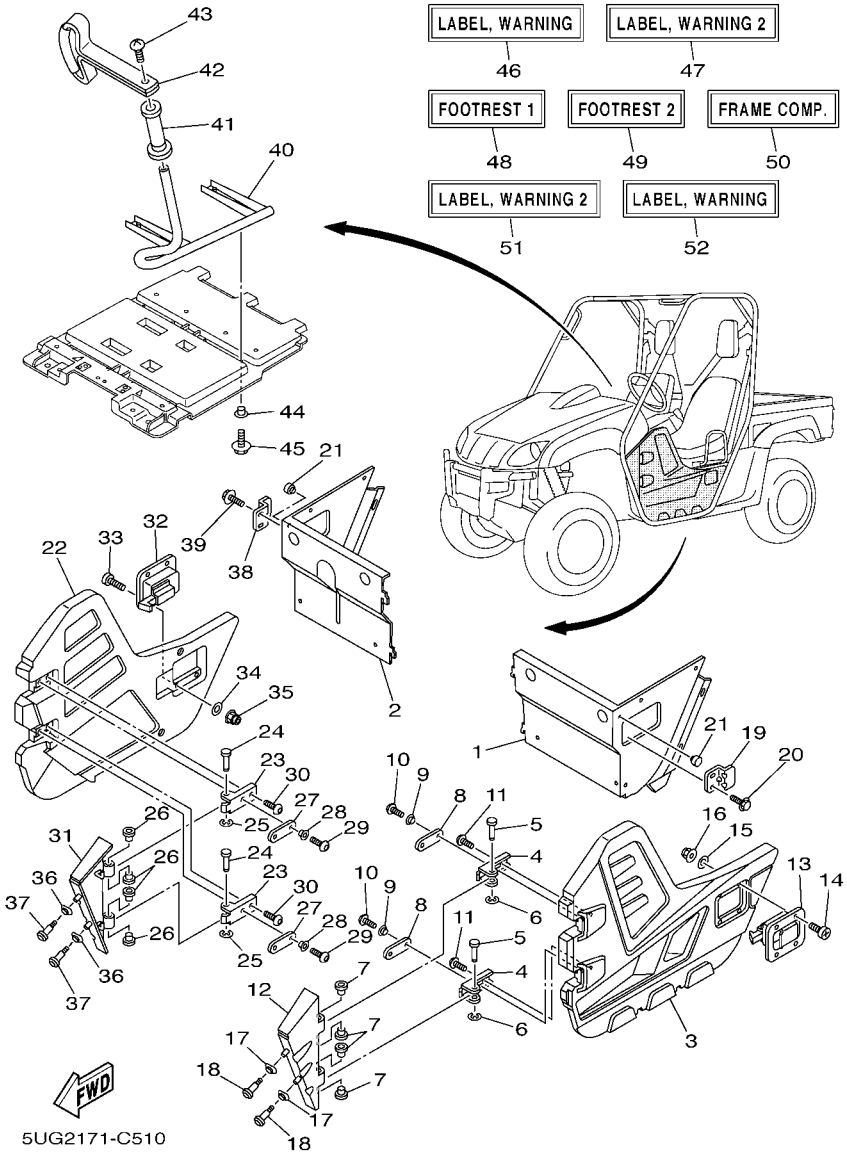

FIG. 53 ALTERNATE 2

REF. NO.	PART NO.	DESCRIPTION	USA	CAN				REMARKS
28	90387–06089	COLLAR	2	2				
29	5B4–F1739–00	BOLT	2	2				
30	5B4–F1722–00	BOLT 2	2	2				
31	5B4–F197K–00	HINGE 2	1	1				
32	5B4–F389F–00	HANDLE, LATCH	1	1				
33	98907–05020	SCREW, BIND	4	4				
34	5B4–F2149–00	WASHER	4	4				
35	95602–05200	NUT, SELF-LOCKING	4	4				
36	5UG–K7526–00	WASHER 2	2	2				
37	5B4–K7519–00	BOLT	2	2				
38	5B4–F389E–00	LATCH	1	1				
39	5B4–F1738–00	BOLT	2	2				
40	5B4–F474A–00	ASSIST, GRIP	1	1				
41	5B4–F6241–00	GRIP	1	1				
42	5B4–F4773–00	HANDLE, SEAT	1	1				
43	98907–06020	SCREW, BIND	1	1				
44	90387–06210	COLLAR	4	4				
45	90105–06831	BOLT, FLANGE	4	4				
46	5B4–F1568–01	LABEL, WARNING	1	1				ENGLISH
47	5B4–F1558–00	LABEL, WARNING 2	1	1				ENGLISH
48	5UG–F7411–11	FOOTREST 1	1	1				
49	5UG–F7421–11	FOOTREST 2	1	1				
50	5UG–F1110–39	FRAME COMP.	1	1				
51	5B4–F1558–10	LABEL, WARNING 2		1				FRENCH
52	5B4–F1568–10	LABEL, WARNING		1				FRENCH

NUMERICAL INDEX

PART NO.	GRID NO.
5KM–11101–01	B – 2
5KM–11133–10	B – 2
5KM–11134–10	B – 2
5UG–11166–00	C – 6
3YF–11181–00	B – 4
1L9–11186–00	B – 2
3YF–11187–00	B – 2
214–11198–01	B – 12
	E – 3
5KM–11310–00	B – 4
5KM–11351–00	B – 4
5KM–11400–00	B – 5
5KM–11447–00	B – 5
5KM–11454–10	B – 5
5KM–11530–00	B – 5
5KM–11536–00	B – 5
5KM–11565–00	B – 5
2C6–11603–00	B – 5
2C6–11605–00	B – 5
2C6–11607–00	B – 5
3YF–11631–00–X0	B – 5
3YF–11633–01	B – 5
3YF–11636–00	B – 5
3YF–11638–00	B – 5
5LP–11651–00	B – 5
5KM–11681–00	B – 5
5KM–12111–00	B – 7
3YF–12113–00	B – 7
3YF–12114–00	B – 7
3YF–12116–00	B – 7
3YF–12117–01	B – 7
4G0–12118–00	B – 7
5H0–12119–00	B – 7
3YF–12121–00	B – 7
3YF–12146–00	B – 7
3YF–12151–00	B – 7
2NX–12156–00	B – 7
2NX–12159–00	B – 7
3YF–12161–00	B – 7
3YF–12162–00	B – 7
3YF–12163–00	B – 7
3YF–12166–00	B – 7
5KM–12170–00	B – 8
5KM–12176–00	B – 8
5KM–12210–00	B – 8
4DW–12213–00	B – 8
3TB–12215–01	B – 2
5KM–12216–00	B – 8

PART NO.	GRID NO.
5KM–12231–10	B – 8
3YF–12233–01	B – 8
5KM–12241–00	B – 8
3YF–12247–00	B – 8
3YF–12284–00	B – 8
3YF–12288–00	B – 8
3YF–12290–00	B – 8
5UG–12413–00	B – 10
5KM–12420–10	B – 9
5KM–12421–00	B – 9
5KM–12422–00	B – 9
5KM–12428–00	B – 9
5KM–12434–00	B – 10
11H–12438–10	B – 9
5KM–12450–10	B – 9
5KM–12469–00	B – 10
5KM–12481–00	B – 10
5KM–12577–00	B – 10
5KM–12579–00	B – 10
52W–12611–02	C – 9
5UG–12651–00	C – 9
5UG–12653–00	C – 9
5UG–12681–00	C – 9
5KM–12858–00	B – 12
3AJ–13161–01	B – 12
5KM–13171–00	B – 12
5KM–13181–00	B – 13
5KM–1319K–00	B – 13
5KM–13300–00	B – 12
5KM–13329–00	B – 12
5KM–13355–00	B – 12
5KM–13410–00	B – 12
5GH–13440–00	B – 12
5UG–13461–00	B – 12
5UG–13487–00	D – 4
5KM–13490–00	B – 13
1YW–13497–00	B – 12
5UG–13586–00	B – 15
5KM–13596–00	B – 15
5UG–13910–00	E – 8
5UG–14103–10	C – 4
5EA–14105–00	C – 3
5KM–1410A–00	C – 3
4BP–14139–01	C – 4
4KM–14142–40	C – 4
2H0–14147–00	C – 4
4WV–14147–10	C – 3
5DM–1414M–30	C – 3

PART NO.	GRID NO.
1UY–14155–00	C – 4
522–14161–00	C – 4
127–14186–00	C – 3
5KM–14190–23	C – 3
12R–14191–00	C – 3
24W–14193–00	C – 4
31A–14197–00	C – 4
3CF–14197–00	C – 4
5GJ–14197–00	C – 3
5UG–14197–00	C – 4
5KM–14197–10	C – 4
3G2–14231–11	C – 3
1HX–14231–12	C – 3
3G2–14231–29	C – 3
5GH–14261–00	C – 3
5UG–14271–00	E – 8
5UG–14271–50	E – 8
5AP–14280–00	C – 4
5UG–14293–00	C – 3
5UG–14294–00	E – 8
5UG–14295–00	E – 8
5UG–14298–00	E – 8
4WV–14349–00	C – 4
5UG–14415–00	D – 10
31A–14419–00	B – 15
5KM–14419–00	B – 15
31A–14435–00	B – 15
4GY–1443E–00	D – 5
5BF–1443E–00	C – 9
5UG–14457–00	D – 10
5UG–14476–00	D – 10
583–14561–00	C – 3
5DM–14561–00	C – 3
1FN–14565–00	C – 3
3YF–14613–01	C – 5
5UG–14737–00	C – 5
5UG–14901–10	C – 3
5KM–1490H–00	C – 4
5UG–1490J–00	C – 3
5KM–14912–00	C – 3
5GH–14918–00	C – 3
5KM–14918–00	C – 3
4KM–14933–00	C – 3
55X–14937–00	C – 4
5DM–14985–00	C – 3
28V–14988–00	C – 4
5KM–15100–11	C – 6
5KM–15113–00	C – 8

PART NO.	GRID NO.
5KM–15163–00	C – 6
5UG–15199–00	C – 7
5KM–15315–00	C – 8
5KM–15351–00	C – 8
5UG–15362–00	C – 6
5UG–15371–00	D – 14
5KM–15379–00	C – 8
4WV–15381–00	C – 7
11H–15383–02	C – 15
4WV–15388–00	C – 6
5KM–15411–10	C – 8
5KM–15421–00	C – 8
5KM–15431–00	C – 8
5KM–15442–00	C – 6
5KM–15451–00	C – 8
5KM–15453–00	C – 8
5KM–15463–00	C – 6
5KM–15472–01	C – 9
5KM–15474–00	C – 9
5GH–15512–00	C – 11
5KM–15517–10	C – 11
5KM–15522–00	C – 11
5KM–15590–00	C – 11
21V–15719–00	C – 8
5UG–15777–00	C – 10
5KM–16181–00	B – 5
5KM–16611–10	C – 12
5KM–16620–00	C – 12
5KM–16626–00	C – 12
4SH–16664–00	C – 12
5KM–17223–00	C – 14
5UG–17233–00	C – 14
5KM–17285–00	C – 14
5KM–17402–01	C – 14
5KM–17453–00	C – 14
5KM–17521–00	C – 15
5KM–17523–10	C – 14
4KB–17531–00	C – 15
5KM–17531–00	C – 15
4KB–17531–10	C – 15
5KM–17531–10	C – 15
4KB–17531–20	C – 15
5KM–17531–20	C – 15
4KB–17531–30	D – 2
5KM–17531–30	C – 15
4KB–17531–40	D – 2
5KM–17531–40	C – 15
4KB–17531–50	D – 2

PART NO.	GRID NO.
5KM–17531–50	C – 15
4KB–17531–60	D – 2
5KM–17551–10	C – 15
5UG–17556–00	C – 15
5UG–17582–00	C – 14
5UG–17583–00	C – 14
5KM–17611–00	C – 12
5KM–1761A–10	D – 2
5UG–17620–00	C – 12
5KM–17623–00	C – 12
5KM–17632–00	C – 12
4WV–17639–10	C – 12
5KM–17641–00	C – 12
4WV–17644–00	C – 13
5KM–17645–00	C – 12
4WV–17653–00	C – 12
4WV–17654–01	C – 12
4WV–17660–10	C – 12
4CW–17664–00	C – 13
4WV–17670–00	C – 12
5UG–17681–00	C – 14
4WV–17684–00	C – 13
5UG–18104–00	D – 4
5UG–18115–00	D – 4
5KM–18129–01	D – 4
5GH–18131–00	D – 4
5KM–18146–00	D – 4
5UG–18174–00	D – 4
5KM–18191–00	D – 4
5KM–18197–00	D – 4
4SH–18198–00	D – 4
5UG–18300–01	D – 4
5KM–18319–00	E – 2
5KM–18323–00	D – 3
5KM–18511–00	D – 3
5KM–18512–00	D – 3
5KM–18514–00	E – 3
5KM–18531–01	D – 3
5UG–18540–00	D – 3
5KM–18542–00	D – 3
4UN–18566–00	D – 3
5GH–18617–00	D – 4
5KM–21315–00	D – 6
5KM–21316–00	D – 6
5UG–21485–00	D – 6
5UG–21486–00	D – 6
5UG–2177A–00	D – 10
5UG–2179B–20	G – 12

PART NO.	GRID NO.
5GS–21871–00	B – 11
26H–21874–00	B – 11
26H–21875–00	B – 11
5KM–22149–00	E – 6
5KM–23448–00	F – 4
	F – 6
5UG–23517–00	F – 4
	F – 6
5KM–23526–00	D – 12
	E – 6
5KM–2385L–01	E – 5
5KM–2385M–01	E – 5
5RB–24180–00	E – 9
5KM–24411–00	C – 3
2P5–24610–00	E – 8
5KM–2510H–10	E – 12
	E – 14
5KM–2510J–20	E – 12
5KM–2510J–30	E – 14
3HN–2512G–01	E – 12
	E – 14
2HR–2512J–00	E – 12
	E – 14
5KM–2536E–10	F – 3
	F – 5
5UG–25719–00	F – 10
3LD–2580T–01	F – 2
3LD–2580U–01	F – 2
5UG–2580V–01	F – 7
5UG–25827–00	F – 7
5GH–25828–00	F – 7
5UG–25833–00	F – 7
5UG–2583T–00	F – 10
5UG–25852–00	F – 10
5UG–25853–00	F – 10
5UG–25854–00	F – 10
5UG–25855–00	F – 10
5UG–25877–00	F – 10
5UG–25878–00	F – 10
5UG–25880–00	F – 10
5UG–25898–00	F – 7
3JD–25917–00	F – 7
4GY–25919–50	F – 7
3LD–25924–00	F – 2
5GH–25924–00	F – 7
3JD–25926–00	F – 7
1UY–25926–51	F – 7
3LD–25934–01	F – 2

PART NO.	GRID NO.
1UY–25937–51	F – 7
1UY–25938–51	F – 7
3JD–25961–00	F – 7
5UG–25972–00	F – 7
5UG–25973–00	F – 7
5UG–25975–00	F – 7
5UG–25977–00	F – 7
5UG–25978–00	F – 7
5UG–26311–10	F – 8
5UG–26331–00	F – 9
5UG–26341–00	F – 9
128–27114–00	F – 12
4X4–27114–00	F – 12
4SS–27218–00	F – 10
2YK–27222–00	F – 10
5KM–27414–01	C – 5
5UG–28229–00	D – 10
5GH–28349–00	D – 8
5KM–42752–00	E – 2
5KM–45531–10	E – 12
5UG–45593–00	D – 2
5UG–46101–01	D – 13
5KM–46102–00	D – 13
5KM–46107–00	E – 3
22U–46117–00–25	D – 14
22U–46117–00–30	D – 14
22U–46117–00–40	D – 14
24W–46118–00–12	D – 13
24W–46118–00–14	D – 13
24W–46118–00–16	D – 13
24W–46118–00–18	D – 13
24W–46118–00–20	D – 13
4WV–46119–01	E – 2
5KM–46119–01	E – 3
4WV–46119–11	E – 2
5KM–46119–11	E – 3
4WV–46119–21	E – 2
5KM–46119–21	E – 3
4WV–46119–31	E – 2
5KM–46119–31	E – 3
4WV–46119–41	E – 2
5KM–46119–41	E – 3
4WV–46119–51	E – 2
5KM–46119–51	E – 3
5KM–46119–61	E – 3
5KM–46126–00	D – 14
2HR–46127–00–25	D – 13
2HR–46127–00–30	D – 13

PART NO.	GRID NO.
2HR–46127–00–35	D – 13
2HR–46127–00–40	D – 13
2HR–46127–00–45	D – 13
2HR–46127–00–50	D – 13
5GT–46136–00	E – 4
5KM–46136–00	D – 14
5GT–46137–00	E – 4
5KM–46137–00	D – 14
5KM–46141–11	E – 2
5KM–46143–00	E – 2
5UG–46144–00	D – 13
4WV–46145–10	E – 2
5KM–46146–10	E – 2
5UG–46151–01	D – 13
5KM–46152–00	D – 14
5KM–46155–00	E – 2
2HR–46156–00	D – 14
4WV–46159–00	E – 2
5UG–46160–10	E – 2
5UG–46161–00	E – 2
5UG–46162–00	E – 2
4WV–46167–00	E – 3
5KM–4616A–02	E – 2
5UG–46173–00	E – 4
5GT–46187–00	E – 3
5UG–46212–00	D – 13
5KM–46441–00	E – 2
5KM–46451–00	E – 3
5KM–46470–12	E – 2
5KM–46559–00	D – 14
8V0–77171–00	D – 8
8M6–77175–00	D – 9
5KM–81410–00	G – 2
5KM–81450–11	G – 2
3AJ–81801–00	G – 3
3AJ–81826–00	G – 3
4XV–8182A–00	G – 3
11H–81844–00	G – 3
1FK–81847–00	G – 3
5KM–81890–00	G – 3
4SV–81940–12	G – 8
5DM–81950–00	G – 8
1UY–81950–92	G – 9
29U–81950–93	G – 8
5BN–81960–00	G – 7
3WP–81980–00	G – 8
3XV–81980–00	G – 8
5FU–82103–00	C – 4

PART NO.	GRID NO.
371–82121–00	E – 10
3L8–82131–01	G – 7
1AE–82151–00	G – 8
5JJ–82151–10	G – 8
5JJ–82151–30	G – 8
5JJ–82151–50	G – 8
5ND–82180–00	G – 8
5FU–82310–00	G – 7
3YF–82370–00	G – 7
5KM–82509–10	G – 11
5UG–82529–00	G – 8
4KB–82530–10	G – 9
5KM–82540–00	G – 7
5LP–82540–01	G – 7
5KM–82541–00	G – 11
4BA–82560–00	G – 7
5GM–82560–00	G – 7
5KM–82560–00	G – 7
	G – 14
5ND–82560–00	G – 8
5FU–82560–10	G – 8
5UG–82590–30	G – 8
5UG–82590–40	G – 8
5UG–83500–00	G – 14
5UG–83500–10	G – 4
5GH–83516–00	G – 11
5UG–83530–01	G – 11
5UG–83530–10	G – 11
5UG–83755–10	G – 7
5FU–83790–00	C – 4
5UG–83976–10	G – 11
2GU–84332–00	G – 5
2GU–84334–00	G – 5
5KM–84703–00	G – 5
5KM–84710–00	G – 6
1A2–84714–41	G – 6
5KM–8472C–10	G – 6
5UG–85540–10	G – 7
5UG–E2405–00	B – 10
5UG–E244E–01	B – 11
5UG–E244F–00	B – 11
5UG–E2461–00	B – 10
5ND–E2462–00	B – 11
5ND–E2535–00	B – 11
5UG–E2564–00	B – 10
5UG–E2576–00	B – 10
5UG–E2577–00	B – 10
5UG–E2579–00	B – 10

PART NO.	GRID NO.
5UG–E2623–00	B – 11
5ND–E2675–00	B – 10
5UG–E2691–00	C – 9
5UG–E2695–00	C – 10
5UG–E3405–00	B – 14
5UG–E3406–01	B – 14
5UG–E3416–00	B – 14
5UG–E3470–00	B – 11
5UG–E3581–00	B – 15
5UG–E3591–00	B – 15
5UG–E3895–00	E – 8
5UG–E4137–00	B – 15
5UG–E4411–00	B – 15
5UG–E4412–01	B – 15
5UH–E4424–00	B – 15
5UG–E4437–00	B – 15
5UH–E4438–00	B – 15
5UG–E4451–00	B – 15
5UG–E4453–10	B – 15
5UG–E4458–00	B – 15
5UG–E4462–00	B – 15
5UH–E4468–00	B – 15
5UG–E4476–00	C – 2
5UG–E4611–01	C – 5
5UG–E4639–00	C – 5
5UG–E4710–01	C – 5
5ND–E4719–00	C – 5
5UG–E4752–00	C – 5
5UG–E4755–00	C – 5
5ND–E4759–00	C – 5
5UG–E4769–00	B – 15
5UG–E4777–00	C – 5
5UG–E5471–10	C – 9
5UG–E5473–00	C – 9
5UG–E5499–00	C – 9
5UG–F1110–30	D – 6
2P5–F1145–00	D – 6
5UG–F114H–00	D – 6
5UG–F114J–00	D – 6
5UG–F116B–00	D – 6
5UG–F139T–00	D – 9
5UG–F1440–00	C – 5
5UG–F1494–00	D – 9
5UG–F1511–10	D – 8
5UG–F151J–00	D – 6
5UG–F151K–02	D – 6
5UG–F151K–11	D – 6
4XE–F1539–10	G – 12

PART NO.	GRID NO.
4XE–F1539–10	G – 13
5UG–F153A–20	G – 12
	G – 13
4XE–F1549–00	G – 12
	G – 13
5UG–F1558–00	G – 12
	G – 13
5ND–F1558–10	G – 13
5UG–F1568–01	G – 12
	G – 13
5UG–F1568–11	G – 13
5UG–F1575–00	C – 9
5UG–F163G–40	G – 12
	G – 13
5UG–F1696–01	G – 12
	G – 13
5UG–F1696–10	G – 13
5UG–F171S–00	G – 7
5UG–F172W–00	C – 9
5FU–F175B–01	D – 8
	E – 7
5UG–F1780–00	D – 9
5UG–F1781–40	G – 12
	G – 13
5UG–F1782–40	G – 12
	G – 13
5UG–F1797–00	D – 9
5UG–F1798–10	F – 13
5UG–F1986–00	D – 6
5UG–F2171–00	D – 12
5UG–F217M–10	D – 12
5UG–F217N–10	D – 12
5UG–F2210–10	E – 5
5UG–F2417–00	F – 14
5UG–F2465–00	F – 11
	G – 10
5UG–F2548–00	F – 8
5UG–F254J–00	D – 10
5UG–F254K–00	D – 10
5UG–F2873–10	D – 10
5UG–F2875–10	D – 10
5UG–F2898–00	D – 7
5UG–F3123–00	E – 6
5UG–F3139–00	D – 9
5UG–F3183–00	E – 7
5UG–F3192–00	F – 10
5UG–F3350–01	E – 6
5UG–F3391–02	D – 8

PART NO.	GRID NO.
5UG–F3394–00	E – 11
5UG–F3397–00	D – 8
5UG–F3400–00	E – 7
5UG–F3447–00	D – 8
5UG–F3489–00	E – 7
5UG–F3501–11	E – 12
5UG–F3502–11	E – 14
5UG–F3527–00	E – 7
5UG–F3540–00	E – 6
5FU–F3549–00	E – 6
	E – 12
	E – 14
5UG–F3550–00	E – 6
5UG–F357A–00	E – 6
5UG–F358A–00	E – 6
5UG–F3811–00	E – 7
5UG–F3812–00	E – 7
5UG–F3818–00	E – 7
4XE–F3833–00	E – 7
JN3–F3838–00	E – 7
5UG–F3840–00	E – 7
5UG–F3841–00	E – 7
5UG–F3844–00	E – 7
5UG–F3863–00	E – 7
5UG–F386G–00	E – 5
5UG–F386H–00	E – 5
5UG–F387F–00	E – 7
5UG–F387G–00	E – 7
5UG–F387J–00	E – 7
5UG–F387K–00	E – 7
5UG–F389E–00	F – 12
5UG–F4111–01	E – 8
5UG–F4141–01	D – 10
4XE–F4145–00	G – 7
5UG–F414H–00	E – 9
5UG–F414J–00	E – 9
5UG–F4157–00	E – 9
5UG–F416E–00	G – 13
5UG–F4300–00	E – 8
5UG–F4311–00	E – 8
5UG–F4312–00	E – 9
5UG–F4313–00	E – 9
5UG–F4314–00	E – 9
JN6–F4560–00	E – 8
5UG–F4669–00	F – 13
5UG–F470E–00	E – 10
5UG–F470F–00	E – 10
5UG–F4710–00	E – 10

PART NO.	GRID NO.
5UG–F472L–00	E – 11
5UG–F4735–00	E – 11
4XE–F4747–00	E – 10
2P5–F474W–00	E – 10
5UG–F4796–00	E – 10
5UG–F481H–00	G – 10
5UG–F483J–00	F – 13
2P5–F4850–00	F – 12
5UG–F4867–00	F – 12
5UG–F4897–00	G – 12
	G – 13
5UG–F4897–10	G – 13
5UG–F510F–20	E – 12
	E – 14
5UG–F510G–10	E – 12
	E – 14
5UG–F510U–00	F – 3
	F – 5
5UG–F5111–10	E – 12
	E – 14
5UG–F511G–00	E – 12
	E – 14
	F – 3
	F – 5
5UG–F511H–00	E – 12
	E – 14
	F – 3
	F – 5
2P5–F512A–00	E – 12
	E – 14
	F – 3
	F – 5
5UG–F512G–00	E – 12
	E – 14
	F – 3
	F – 5
5UG–F512H–00	E – 12
	E – 14
	F – 3
	F – 5
5UG–F512J–00	F – 3
	F – 5
5UG–F514A–00	E – 13
	E – 15
5UG–F5180–10	E – 12
	E – 14
5UG–F530F–11	F – 3
	F – 5

PART NO.	GRID NO.
5UG–F530T–20	F – 3
5UG–F530U–20	F – 5
5UG–F530V–00	F – 3
5UG–F530W–00	F – 5
5UG–F530X–00	F – 3
	F – 5
5UG–F530Y–00	F – 3
	F – 5
5UG–F5310–20	F – 3
	F – 5
5UG–F5390–10	F – 3
	F – 5
5UG–F5664–00	F – 8
5UG–F582T–00	F – 2
5UG–F5831–00	F – 7
5UG–F5871–00	F – 11
5UG–F5872–01	F – 10
5UG–F5873–01	F – 11
5ND–F5875–00	F – 10
5UG–F589H–00	F – 9
5UG–F5970–00	F – 8
2P5–F6123–00	F – 12
JN6–F6333–10	F – 9
5UG–F6372–00	F – 9
5UG–F7114–00	D – 6
5UG–F7200–00	F – 8
5UG–F7286–00	F – 8
5UG–F7411–00	F – 8
5UG–F7413–00	F – 8
5UG–F7421–00	F – 8
5UG–F7801–00	F – 8
5ND–F8100–00	D – 7
2P5–F8108–00	D – 10
5UG–F811A–00	D – 7
5UG–F8228–01	F – 8
5UG–F8309–01	D – 8
5UG–F8329–00	F – 14
5UG–F835L–00	F – 14
5UG–F837L–00	D – 9
2P5–F8385–00	F – 14
5UG–F8395–00	F – 14
5UG–F8415–00	F – 13
5UG–F842A–00	F – 14
2P5–F845N–00	F – 14
5UG–F849R–00	F – 12
5UG–G5158–00	F – 9
5UG–G6172–00	D – 14
5UG–G6241–00	E – 10

PART NO.	GRID NO.
5UG–G6242–00	E – 10
5UG–G7491–00	E – 5
5UG–H1815–01	G – 3
5FU–H191B–10	G – 10
5FU–H1920–10	G – 10
5FU–H1942–10	G – 10
5UG–H2100–00	G – 7
5UG–H2115–00	G – 8
5UG–H2116–00	G – 8
5UG–H2129–10	G – 7
5UG–H212B–02	G – 7
5UG–H2510–00	G – 8
5UG–H251S–00	F – 8
5UG–H2526–00	G – 11
5UG–H2579–00	G – 8
5FU–H2599–01	G – 10
5FU–H4314–10	G – 5
5FU–H4320–10	G – 5
5FU–H4340–10	G – 5
5UG–H5111–00	G – 13
5UG–H5131–00	G – 13
2P5–K7175–00	F – 13
2P5–K7180–00	F – 13
2P5–K7185–00	F – 13
5UG–K7195–01	F – 13
2P5–K7515–00	F – 13
5UG–K7561–01	D – 10
5UG–K7736–00	D – 9
5UG–K7764–00	G – 12
	G – 13
5UG–K7764–10	G – 13
5UG–K810F–01	D – 10
5UG–K810G–01	D – 10
5UG–K810N–10	F – 12
JJ3–K818M–00	F – 13
5UG–K8191–00	F – 12
5UG–K8192–10	F – 12
5UG–K831A–10	F – 15
5UG–K831E–10	F – 15
5UG–K8336–01	F – 15
5UG–K8365–00	F – 13
5UG–K8392–01	F – 15
5UG–K8393–20	F – 15
5UG–K8394–20	F – 15
5UG–K8483–00	G – 12
	G – 13
5UG–K8483–10	G – 13
GH1–U3774–00	E – 10

PART NO.	GRID NO.
F1B–U3850–01	E – 10
5UG–W0042–00	F – 10
3LD–W0045–00	F – 2
3LD–W0045–10	F – 2
5UG–W0046–01	F – 7
3GD–W0047–00	F – 7
3JD–W0047–00	F – 2
1UY–W0048–50	F – 2
	F – 7
3LD–W0057–00	F – 2
5UG–W0057–00	F – 7
5UG–W0081–00	G – 14
5KM–Y1754–00	C – 15
5UG–Y4612–00	D – 13
90101–10568	B – 5
90105–06023	B – 9
90105–06031	C – 6
	C – 8
90105–06831	B – 10
	D – 6
	F – 9
	F – 13
90105–06832	B – 14
	F – 14
90105–06833	B – 11
	F – 11
	G – 7
90105–07004	B – 8
90105–081A7	F – 10
90105–08867	D – 6
90105–08879	E – 9
90105–09647	B – 4
90105–09648	B – 2
90105–10082	F – 2
90105–10111	D – 15
90105–10253	D – 12
	E – 6
90105–10300	D – 6
90105–10402	F – 7
90105–10409	F – 4
	F – 6
90105–10649	B – 4
90105–10650	B – 4
90105–108B1	E – 6
90105–10N51	E – 4
90105–12036	E – 5
90105–12037	E – 5
90105–14367	D – 3

PART NO.	GRID NO.
90109–06038	F – 7
90109–060F3	F – 13
90109–063E8	B – 7
90109–063E9	B – 2
90109–063F1	C – 9
90109–06723	G – 7
90110–06039	B – 8
90110–06093	B – 3
90110–06200	F – 12
90113–08004	E – 2
90114–10012	E – 12
	E – 14
	F – 3
	F – 5
90119–05001	D – 8
	D – 10
	F – 8
90119–06044	G – 7
90119–06868	B – 11
	D – 8
	G – 7
90149–05299	G – 11
90149–05321	D – 3
90149–06280	E – 13
	E – 15
90149–08152	C – 15
90149–08268	F – 2
90150–05802	G – 5
90151–05023	C – 8
90154–05005	D – 10
90157–04088	C – 12
90159–05022	G – 5
90164–04800	D – 9
90164–05800	D – 9
90167–05025	F – 13
90167–05030	F – 13
90167–06800	F – 12
90170–06128	B – 7
90170–08358	D – 4
90170–18003	B – 6
90170–36279	C – 13
90171–12039	E – 6
	E – 7
90176–05054	E – 9
90179–06520	C – 9
90179–08410	C – 5
90179–10540	E – 12
	E – 14

PART NO.	GRID NO.
90179–10540	F – 3
	F – 5
90179–12325	D – 13
90179–16001	C – 12
90179–16661	C – 15
90179–22005	C – 12
90179–22015	C – 15
90179–24003	E – 12
	E – 14
	F – 3
	F – 5
90179–55660	D – 2
90179–60001	C – 15
90179–65305	D – 13
90183–05008	D – 10
	G – 5
90183–05073	D – 8
	F – 8
90183–050A0	D – 8
90183–06053	E – 6
90183–08800	D – 8
90185–10060	D – 12
	E – 6
	E – 10
	F – 4
	F – 6
90185–12061	E – 7
90185–12072	E – 5
90185–14070	D – 2
90201–047R9	C – 12
90201–05016	C – 5
90201–05029	G – 11
90201–06008	D – 4
90201–06023	C – 5
90201–06055	F – 14
90201–06074	D – 9
	G – 6
90201–06557	D – 8
90201–06778	C – 5
90201–07008	C – 5
90201–08016	C – 4
90201–08087	D – 14
90201–096J9	B – 2
	B – 4
90201–10118	F – 10
90201–101A4	B – 4
90201–101J1	D – 15
	E – 4

PART NO.	GRID NO.
90201–101J1	E – 5
	F – 4
	F – 6
90201–10321	B – 5
90201–10774	F – 15
90201–109U6	E – 11
90201–11800	E – 11
90201–12191	D – 13
90201–127J6	F – 12
90201–132G5	D – 4
90201–14633	D – 2
90201–15797	F – 8
90201–170M2	C – 15
90201–17255	C – 14
90201–190T7	C – 12
90201–20015	D – 3
90201–20266	E – 4
90201–20278	C – 14
90201–25291	C – 11
90206–12075	B – 7
90209–06012	B – 11
90209–08249	C – 5
90209–22082	C – 14
90215–18001	B – 6
90240–08124	F – 10
90240–12002	F – 12
90240–13800	D – 8
90267–48820	E – 11
	F – 8
90269–05001	D – 10
90269–05055	D – 4
90269–06800	C – 8
	D – 8
	D – 10
	F – 8
	F – 12
	F – 14
90269–06804	D – 7
	D – 8
90269–08813	C – 2
90280–16053	B – 5
90282–05005	B – 5
90338–05834	E – 8
90338–06041	B – 10
90340–10001	E – 3
90340–14029	E – 3
90340–14036	C – 10
90340–14117	B – 2

PART NO.	GRID NO.
90340–14117	C – 8
90340–14132	B – 12
90340–18101	B – 2
90340–20143	D – 13
90381–17067	F – 3
	F – 5
90387–06113	B – 11
90387–0613B	D – 4
90387–06241	D – 8
90387–062M9	D – 8
90387–066J1	C – 5
	F – 13
90387–077M3	D – 8
90387–2007S	D – 3
90387–250R3	C – 14
90387–26001	C – 14
90387–30008	E – 12
	E – 14
	F – 3
	F – 5
90401–06001	B – 3
90401–08004	B – 12
90401–10159	B – 13
	F – 10
90401–14118	B – 12
90401–20162	B – 12
90413–09001	E – 8
90430–06014	B – 9
	B – 10
90430–06192	B – 3
90430–08204	B – 12
90430–10003	E – 3
90430–10148	G – 7
90430–10171	D – 14
90430–10188	B – 13
90430–14043	B – 12
	C – 10
90430–14194	D – 3
90445–070G6	E – 3
90445–074F6	D – 14
90445–08809	B – 11
90445–08811	B – 11
90445–09220	G – 6
90446–06001	B – 9
90450–22017	B – 14
90450–32015	B – 10
90450–59004	B – 15
90450–64002	C – 9

PART NO.	GRID NO.
90450–65001	B – 15
90450–67002	B – 15
90450–75001	B – 15
90450–81001	C – 9
90450–85001	C – 9
90461–08802	F – 9
90461–12800	B – 10
90461–15139	E – 9
90462–08008	B – 10
90462–08021	C – 8
90462–15800	B – 14
90462–20003	B – 2
90464–10833	B – 11
	D – 15
	G – 8
	G – 11
90464–11803	E – 8
90464–12830	D – 15
	E – 8
	F – 8
	G – 7
	G – 10
90464–16039	F – 9
90464–19815	D – 15
	G – 10
90464–20005	B – 10
	F – 8
	F – 10
	G – 10
90464–20804	D – 15
	G – 10
90464–23041	E – 8
90464–25826	E – 8
90464–29179	B – 11
90464–31827	F – 9
	F – 10
	G – 8
	G – 10
90464–38800	E – 8
	G – 10
90464–40825	F – 8
	G – 10
90464–48800	D – 10
	G – 10
90464–51800	G – 10
90464–76800	F – 8
90465–08361	C – 8
90467–06194	B – 9

PART NO.	GRID NO.
90467–07029	D – 14
	E – 3
90467–08003	B – 11
90467–08017	B – 15
90467–10008	E – 8
90467–10038	B – 10
90467–12053	E – 8
90467–14015	C – 6
90467–15012	D – 5
90467–16195	C – 9
90467–26189	B – 10
90468–16191	D – 8
90480–10517	D – 15
90480–13018	C – 8
90480–15058	E – 9
90480–15235	B – 11
	D – 8
	F – 13
	G – 11
90480–18290	F – 13
90480–25856	G – 10
90480–40047	D – 8
90501–05001	B – 8
90501–06022	D – 3
90501–082E3	B – 12
90501–10353	D – 3
90501–12016	D – 3
90501–16002	D – 3
90501–200A0	D – 14
90501–220A1	B – 5
90501–235L9	E – 4
90501–65001	C – 13
90506–16451	F – 13
90506–20534	F – 8
90508–35764	D – 4
91317–05012	G – 2
91317–06010	B – 10
91317–06012	B – 13
91317–06016	G – 7
91317–06018	B – 2
91317–06020	B – 10
	B – 15
91317–06025	B – 2
91317–06040	B – 2
	B – 4
91317–06050	B – 2
91317–06055	B – 2
91317–06115	B – 2

PART NO.	GRID NO.
91317–06130	B – 2
91317–08016	C – 11
91317–08020	E – 2
91317–08040	C – 6
91401–20020	E – 7
	F – 10
91401–25020	E – 6
91401–30025	F – 12
91A20–07010	C – 4
92907–05100	E – 8
92907–05600	E – 8
92907–06100	F – 12
92907–06200	C – 9
92907–06600	B – 2
	B – 8
	B – 12
	G – 2
	G – 7
92907–08600	C – 15
	D – 13
92907–12200	E – 7
93101–10090	B – 9
93101–12168	C – 7
93101–35001	C – 12
93102–15212	D – 4
93102–20108	B – 6
93102–24034	E – 2
93102–28476	C – 8
93102–30170	C – 15
93102–35004	C – 6
93102–35009	D – 13
93102–42004	C – 14
93102–44454	D – 2
93102–48012	E – 2
93102–65008	D – 14
93104–41119	C – 12
93106–38046	E – 12
	E – 14
93106–38047	E – 12
	E – 14
93106–38800	F – 3
	F – 5
93106–42800	F – 3
	F – 5
93210–08521	B – 7
93210–10096	B – 13
93210–10197	B – 14
93210–11M59	B – 14

PART NO.	GRID NO.
93210–13657	B – 2
93210–14359	E – 2
93210–14369	C – 8
93210–14579	B – 12
93210–16290	B – 5
93210–19026	C – 6
93210–19123	D – 14
93210–19522	B – 3
93210–21190	B – 10
93210–228C4	E – 8
93210–26001	C – 14
93210–27666	E – 12
	E – 14
	F – 3
	F – 5
93210–29196	G – 7
93210–32172	B – 2
93210–321A8	B – 15
93210–33133	B – 9
93210–33786	B – 10
93210–44545	B – 15
	C – 12
93210–57428	B – 12
93210–626A7	D – 13
93210–64488	C – 9
93210–71360	B – 2
93210–78544	C – 15
93210–82001	E – 2
93211–01467	B – 4
93211–40040	E – 2
93211–51749	D – 14
93211–594A4	C – 12
93306–00006	B – 9
93306–00612	C – 14
93306–006Y4	E – 12
	E – 14
93306–00709	E – 3
93306–07801	C – 8
93306–20120	C – 6
93306–20221	C – 14
93306–20321	C – 14
93306–20332	C – 14
93306–20597	D – 2
93306–206Y2	F – 3
	F – 5
93306–20715	C – 15
93306–30318	C – 14
93306–30432	B – 6

PART NO.	GRID NO.
93306–30534	B – 6
93306–30537	C – 15
93306–30574	D – 13
93306–30702	B – 5
93306–37206	C – 15
93306–91201	E – 3
93310–212R6	C – 11
93310–420F2	C – 14
93310–637D3	B – 5
93315–21813	C – 12
93316–00702	E – 3
93316–01003	C – 6
93316–01701	D – 14
93317–85569	D – 13
93399–99948	E – 3
93410–20038	C – 14
	D – 3
93410–22039	D – 14
93410–32826	E – 6
	E – 12
	E – 14
93410–46079	C – 12
93420–13073	B – 12
93430–12008	F – 8
93440–10085	B – 2
93440–20088	E – 3
93440–25084	C – 14
93450–22119	E – 14
93450–24028	B – 5
93450–24062	C – 12
93503–08007	D – 3
93603–21180	B – 8
93606–09002	B – 5
93612–16254	B – 4
93700–06004	F – 3
	F – 5
93900–00813	E – 12
	E – 14
	F – 3
	F – 5
94108–12809	E – 12
	E – 14
94110–12805	F – 3
	F – 5
94581–94070	B – 12
94591–46126	B – 8
94591–54034	C – 14
94701–00241	B – 2

PART NO.	GRID NO.
95027–06008	G – 8
95027–06012	B – 9
	B – 13
	C – 7
95027–06014	B – 12
	C – 6
	C – 8
95027–06016	B – 14
	D – 6
	E – 8
95027–06020	B – 10
	D – 4
95027–06030	C – 6
	C – 8
	D – 4
	G – 3
95027–06040	B – 12
	C – 6
	C – 8
95027–06045	B – 9
95027–06055	C – 6
95027–06065	B – 9
95027–08025	E – 7
95027–10016	D – 14
95027–10025	E – 7
95307–06800	D – 8
	F – 12
95307–08700	D – 4
95607–06200	E – 10
95607–08200	E – 10
	F – 13
95607–10200	D – 15
	E – 4
	E – 5
9560P–10200	D – 6
	E – 11
	F – 15
95617–06100	F – 7
95617–08625	B – 2
95707–05300	G – 11
95707–05500	G – 4
	G – 14
95707–06300	D – 9
	G – 6
95707–06500	C – 5
	F – 13
	G – 8
95707–06600	G – 8

PART NO.	GRID NO.
95707–08500	D – 14
	F – 13
95807–06012	E – 6
95807–06020	B – 14
95807–08012	D – 4
95807–08040	C – 5
95817–06016	C – 7
	D – 4
	F – 9
	F – 12
	F – 14
95817–06020	C – 5
95817–06035	D – 4
95817–08014	E – 5
95817–08016	C – 5
	D – 6
	E – 7
95817–08020	D – 6
	F – 8
95817–08030	C – 15
95817–10020	D – 6
	F – 14
	F – 15
95817–10022	E – 11
95817–10025	D – 14
95817–10030	E – 4
95817–10045	F – 15
9581P–06025	G – 7
9581P–08030	E – 10
9581P–12025	F – 14
95827–06012	F – 10
95827–06014	G – 8
95827–06016	C – 8
	F – 10
95827–06020	C – 9
95827–06025	C – 8
	F – 10
	F – 12
95827–06030	C – 6
	C – 8
95827–06035	C – 5
95827–06040	C – 6
	E – 10
95827–06050	C – 6
95827–08020	E – 10
97007–06020	G – 7
97017–06020	G – 8
97017–08035	D – 13

PART NO.	GRID NO.
97017–10025	F – 15
97027–06016	B – 8
97027–08025	D – 14
97027–08030	C – 15
97607–04114	C – 4
98507–03540	G – 5
98507–04006	C – 3
98507–04008	C – 3
98507–04010	C – 4
98507–05008	C – 3
98507–05014	E – 8
98507–06030	G – 2
98907–05010	E – 9
98907–06035	D – 8
99009–10400	B – 9
99009–11400	B – 12
99009–12400	D – 3
99009–19400	D – 14
	E – 4
99009–35400	B – 5
99009–80500	C – 6
99530–08012	D – 4
99530–10116	B – 2
	C – 6
	C – 8
99530–14016	B – 4

PART NO.	GRID NO.

PART NO.	GRID NO.